Ordinary differential equations (ODEs)

- Ordinary differential equations (ODEs) are differential equations that depend on a single variable.
- Modeling: translates a physical situation or some other observations into a “mathematical model.”

Mathematical Modeling

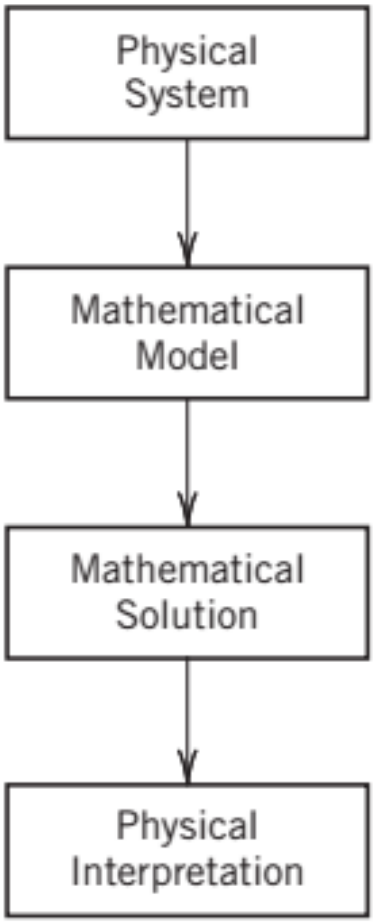

Fig. 1. Modeling, solving, interpreting

- A model is very often an equation containing derivatives of an unknown function. Such a model is called a **differential equation**

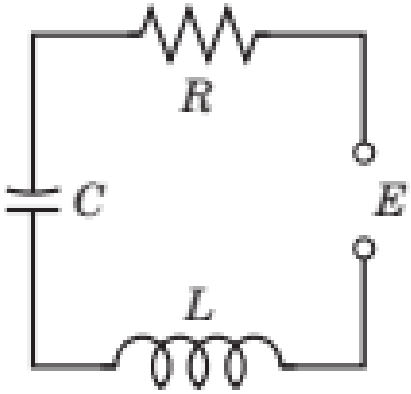

Current I in an RLC circuit

Ordinary differential equation (ODE)

- An **ordinary differential equation (ODE)** is an equation that contains one or several derivatives of an unknown function:

$$y' = \cos x$$

$$y'' + 9y = e^{-2x}$$

$$y'y''' - \frac{3}{2}y'^2 = 0$$

Initial Value Problem (IVP)

- A particular solution is obtained from a general solution by an **initial condition.**

$$y' = f(x, y), \qquad y(x_0) = y_0.$$

EXAMPLE

$$y' = \frac{dy}{dx} = 3y, \qquad y(0) = 5.7.$$

First-order ODEs

- **First-order ODEs** contain only the first derivative y’ and may contain ***y*** and any given functions of *x*

.

$y' = f(x, y).$	$F(x, y, y') = 0$

First-order ODEs

- **Solve first-order ODSs as follow:**

$$y' = dy/dx = \cos x$$

$$y' = \frac{dy}{dx} = 3y, \qquad y(0) = 5.7.$$

First-order ODEs

- **Separable ODEs as:** $g(y)\,y' = f(x)$

$$\int g(y)\,dy = \int f(x)\,dx + c.$$

EXAMPLE

The ODE $y' = (x+1)e^{-x}y^2$ is separable; we obtain $y^{-2}\,dy = (x+1)e^{-x}\,dx$.

By integration, $\quad -y^{-1} = -(x+2)e^{-x} + c, \qquad y = \dfrac{1}{(x+2)e^{-x} - c}.$

EXAMPLE 1 Solving a Separable DE

Solve $(1 + x)\,dy - y\,dx = 0$.

SOLUTION Dividing by $(1 + x)y$, we can write $dy/y = dx/(1 + x)$, from which it follows that

$$\int \frac{dy}{y} = \int \frac{dx}{1 + x}$$

$$\ln|y| = \ln|1 + x| + c_1$$

$$|y| = e^{\ln|1+x| + c_1} = e^{\ln|1+x|} \cdot e^{c_1} \qquad \leftarrow \text{laws of exponents}$$

$$= |1 + x|e^{c_1} \qquad \leftarrow \begin{cases} |1 + x| = 1 + x, & x \geq -1 \\ |1 + x| = -(1 + x), & x < -1 \end{cases}$$

and so

$$y = \pm e^{c_1}(1 + x).$$

Relabeling $\pm e^{c_1}$ by c then gives $y = c(1 + x)$. ≡

EXAMPLE Solve $\dfrac{dy}{dx} = y^2 - 4.$

SOLUTION We put the equation in the form

$$\frac{dy}{y^2 - 4} = dx \quad \text{or} \quad \left[\frac{\frac{1}{4}}{y - 2} - \frac{\frac{1}{4}}{y + 2}\right] dy = dx.$$

$$\frac{1}{4}\ln|y - 2| - \frac{1}{4}\ln|y + 2| = x + c_1$$

$$\ln\left|\frac{y - 2}{y + 2}\right| = 4x + c_2 \quad \text{or} \quad \frac{y - 2}{y + 2} = e^{4x + c_2}$$

$$y = 2\,\frac{1 + ce^{4x}}{1 - ce^{4x}}$$

First-order ODEs

- **Extended Method: Reduction to Separable Form**

$$\boxed{y' = f\left(\frac{y}{x}\right).}$$

set $y/x = u$;

$$y' = u'x + u.$$

Substitution into $y' = f(y/x)$

then gives $u'x + u = f(u)$ or $u'x = f(u) - u$.

$$\frac{du}{f(u) - u} = \frac{dx}{x}.$$

Reduction to Separable Form

Solve

$$2xyy' = y^2 - x^2.$$

Solution. To get the usual explicit form, divide the given equation by $2xy$,

$$y' = \frac{y^2 - x^2}{2xy} = \frac{y}{2x} - \frac{x}{2y}.$$

Now substitute y and y' from (9) and then simplify by subtracting u on both sides,

$$u'x + u = \frac{u}{2} - \frac{1}{2u}, \qquad u'x = -\frac{u}{2} - \frac{1}{2u} = \frac{-u^2 - 1}{2u}.$$

You see that in the last equation you can now separate the variables,

$$\frac{2u\,du}{1 + u^2} = -\frac{dx}{x}. \qquad \text{By integration,} \qquad \ln(1 + u^2) = -\ln|x| + c^* = \ln\left|\frac{1}{x}\right| + c^*.$$

Take exponents on both sides to get $1 + u^2 = c/x$ or $1 + (y/x)^2 = c/x$. Multiply the last equation by x^2 to obtain (Fig. 14)

$$x^2 + y^2 = cx. \qquad \text{Thus} \qquad \left(x - \frac{c}{2}\right)^2 + y^2 = \frac{c^2}{4}.$$

PROBLEM SET 1.3

2. $y^3y' + x^3 = 0$
3. $y' = \sec^2 y$
4. $y' \sin 2\pi x = \pi y \cos 2\pi x$
5. $yy' + 36x = 0$
6. $y' = e^{2x-1}y^2$
7. $xy' = y + 2x^3 \sin^2 \dfrac{y}{x}$ (Set $y/x = u$)
8. $y' = (y + 4x)^2$ (Set $y + 4x = v$)
9. $xy' = y^2 + y$ (Set $y/x = u$)
10. $xy' = x + y$ (Set $y/x = u$)
11. $xy' + y = 0, \quad y(4) = 6$
12. $y' = 1 + 4y^2, \quad y(1) = 0$
13. $y' \cosh^2 x = \sin^2 y, \quad y(0) = \frac{1}{2}\pi$
14. $dr/dt = -2tr, \quad r(0) = r_0$
15. $y' = -4x/y, \quad y(2) = 3$
16. $y' = (x + y - 2)^2, \quad y(0) = 2$
    (Set $v = x + y - 2$)
17. $xy' = y + 3x^4 \cos^2 (y/x), \quad y(1) = 0$
    (Set $y/x = u$)

First-order ODEs

- **Exact ODEs. Integrating**

$$M(x, y)\,dx + N(x, y)\,dy = 0$$

Condition: $$\frac{\partial M}{\partial y} = \frac{\partial N}{\partial x}.$$

From: $$du = \frac{\partial u}{\partial x}\,dx + \frac{\partial u}{\partial y}\,dy$$

Then: $$du = 0.$$

And: $$u(x, y) = c.$$

$$\text{(a)} \quad \frac{\partial u}{\partial x} = M, \qquad \text{(b)} \quad \frac{\partial u}{\partial y} = N.$$

$$u = \int M\,dx + k(y); \qquad u = \int N\,dy + l(x).$$

page 21

First-order ODEs

- **Reduction to Exact Form. Integrating Factors**

From:

$$P(x, y)\,dx + Q(x, y)\,dy = 0,$$

Then:

$$FP\,dx + FQ\,dy = 0$$

A function F(x,y) is then called an **integrating factor**

A case:

$$F(x) = \exp \int R(x)\,dx.$$

$$R = \frac{1}{Q}\left(\frac{\partial P}{\partial y} - \frac{\partial Q}{\partial x}\right).$$

page 23

Solve $\cos(x + y)\,dx + (3y^2 + 2y + \cos(x + y))\,dy = 0.$

Solution. ***Step 1. Test for exactness.***

$$M = \cos(x + y), \qquad \frac{\partial M}{\partial y} = -\sin(x + y),$$

$$N = 3y^2 + 2y + \cos(x + y). \qquad \frac{\partial N}{\partial x} = -\sin(x + y).$$

Step 2. Implicit general solution.

$$u = \int M\,dx + k(y) = \int \cos(x + y)\,dx + k(y) = \sin(x + y) + k(y).$$

$$\frac{\partial u}{\partial y} = \cos(x + y) + \frac{dk}{dy} = N = 3y^2 + 2y + \cos(x + y).$$

Hence $dk/dy = 3y^2 + 2y$. By integration, $k = y^3 + y^2 + c^*$

$$u(x, y) = \sin(x + y) + y^3 + y^2 = c.$$

PROBLEM SET 1.4

1. $2xy\,dx + x^2\,dy = 0$
2. $x^3dx + y^3dy = 0$
3. $\sin x \cos y\,dx + \cos x \sin y\,dy = 0$
4. $e^{3\theta}(dr + 3r\,d\theta) = 0$
5. $(x^2 + y^2)\,dx - 2xy\,dy = 0$
6. $3(y + 1)\,dx = 2x\,dy, \quad (y + 1)x^{-4}$
7. $2x \tan y\,dx + \sec^2 y\,dy = 0$
8. $e^x(\cos y\,dx - \sin y\,dy) = 0$
9. $e^{2x}(2 \cos y\,dx - \sin y\,dy) = 0, \quad y(0) = 0$
10. $y\,dx + [y + \tan(x + y)]\,dy = 0, \quad \cos(x + y)$
11. $2 \cosh x \cos y\,dx = \sinh x \sin y\,dy$
12. $(2xy\,dx + dy)e^{x^2} = 0, \quad y(0) = 2$
13. $e^{-y}\,dx + e^{-x}(-e^{-y} + 1)\,dy = 0, \quad F = e^{x+y}$
14. $(a + 1)y\,dx + (b + 1)x\,dy = 0, \quad y(1) = 1,$
    $F = x^a y^b$

First-order ODEs

- **Linear ODEs: can be brought into the form**

$$y' + p(x)y = r(x),$$

In engineering, r(x) is frequently called the **input**, and y(x) is called the **output** or the *response* to the input (and, if given, to the initial condition).

First-order ODEs

- **Homogeneous Linear ODE:**

$$y' + p(x)y = 0$$

By separating variables and integrating:

$$\frac{dy}{y} = -p(x)\,dx, \qquad \text{thus} \qquad \ln|y| = -\int p(x)\,dx + c^*.$$

→the general solution of the homogeneous

$$y(x) = ce^{-\int p(x)\,dx} \qquad (c = \pm e^{c^*} \quad \text{when} \quad y \gtrless 0);$$

First-order ODEs

- **Nonhomogeneous Linear ODE: r(x) is nonzero**

$$y' + p(x)y = r(x),$$

$$y(x) = e^{-h}\left(\int e^{h} r\, dx + c\right), \qquad h = \int p(x)\, dx.$$

Solve the initial value problem

$$y' + y \tan x = \sin 2x, \qquad y(0) = 1.$$

Solution. Here $p = \tan x$, $r = \sin 2x = 2 \sin x \cos x$, and

$$h = \int p\, dx = \int \tan x\, dx = \ln |\sec x|.$$

From this we see that in (4),

$$e^h = \sec x, \qquad e^{-h} = \cos x, \qquad e^h r = (\sec x)(2 \sin x \cos x) = 2 \sin x,$$

and the general solution of our equation is

$$y(x) = \cos x \left(2 \int \sin x\, dx + c \right) = c \cos x - 2 \cos^2 x.$$

From this and the initial condition, $1 = c \cdot 1 - 2 \cdot 1^2$; thus $c = 3$ and the solution of our initial value problem is $y = 3 \cos x - 2 \cos^2 x$. Here $3 \cos x$ is the response to the initial data, and $-2 \cos^2 x$ is the response to the input $\sin 2x$. ■

First-order ODEs

- **Nonhomogeneous Linear ODE (cont..): r(x) is nonzero**

Example: Electric Circuit

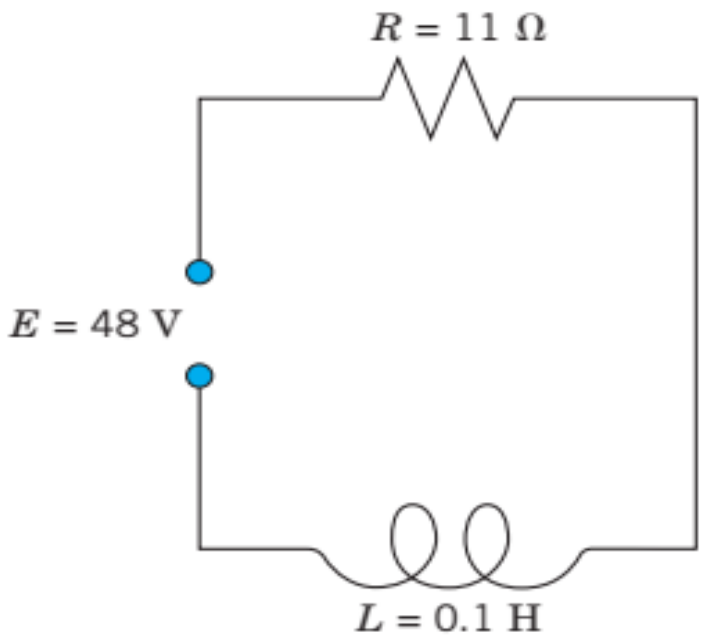

Circuit

solve the resulting ODE for the current I(t) (amperes), where *t* is time.

First-order ODEs

- **Nonhomogeneous Linear ODE (cont..): r(x) is nonzero**

Example: Electric Circuit

According to Kirchoff laws the model of the *RL*-circuit:

$$LI' + RI = E(t), \quad I' + \frac{R}{L}I = \frac{E(t)}{L}.$$

→the general solution

$$I = e^{-(R/L)t}\left(\int e^{(R/L)t}\frac{E(t)}{L}dt + c\right).$$

$$I = e^{-(R/L)t}\left(\frac{E}{L}\frac{e^{(R/L)t}}{R/L} + c\right) = \frac{E}{R} + ce^{-(R/L)t}.$$

page 30

First-order ODEs

- **Nonhomogeneous Linear ODE (cont..): r(x) is nonzero**

$$I = e^{-(R/L)t}\left(\frac{E}{L}\frac{e^{(R/L)t}}{R/L} + c\right) = \frac{E}{R} + ce^{-(R/L)t}.$$

In our case, $R/L = 11/0.1 = 110$ and $E(t) = 48/0.1 = 480 = \text{const}$; thus,

$$I = \tfrac{48}{11} + ce^{-110t}.$$

initial value $I(0) = 0$ gives $I(0) = E/R + c = 0$, $c = -E/R$ and the particular solution

$$I = \frac{E}{R}(1 - e^{-(R/L)t}), \qquad \text{thus} \qquad I = \frac{48}{11}(1 - e^{-110t}).$$

page 30

First-order ODEs

- **Reduction to Linear Form. Bernoulli Equation**

$$y' + p(x)y = g(x)y^a \qquad (a \text{ any real number})$$

If a=0 or a=1, Bernoulli equation is linear

Otherwise it is nonlinear, set as:

$$u(x) = [y(x)]^{1-a}.$$

$$u' = (1-a)y^{-a}y' = (1-a)y^{-a}(gy^a - py).$$

get the linear ODE $u' + (1-a)pu = (1-a)g.$

page 31

First-order ODEs

- **Reduction to Linear Form. Bernoulli Equation**

Example:

$$y' = Ay - By^2$$

Solution.

$$y' - Ay = -By^2$$

to see that $a = 2$, so that $u = y^{1-a} = y^{-1}$

$$u' = -y^{-2}y' = -y^{-2}(Ay - By^2) = B - Ay^{-1}.$$

$$u' + Au = B.$$

$$u = ce^{-At} + B/A. \qquad y = \frac{1}{u} = \frac{1}{ce^{-At} + B/A}$$

page 32

PROBLEM SET 1.5

3. $y' - y = 5.2$
4. $y' = 2y - 4x$
5. $y' + ky = e^{-kx}$
6. $y' + 2y = 4\cos 2x, \quad y(\frac{1}{4}\pi) = 3$
7. $xy' = 2y + x^3 e^x$
8. $y' + y\tan x = e^{-0.01x}\cos x, \quad y(0) = 0$
9. $y' + y\sin x = e^{\cos x}, \quad y(0) = -2.5$
10. $y'\cos x + (3y - 1)\sec x = 0, \quad y(\frac{1}{4}\pi) = 4/3$
11. $y' = (y - 2)\cot x$
12. $xy' + 4y = 8x^4, \quad y(1) = 2$

22. $y' + y = y^2, \quad y(0) = -\frac{1}{3}$
23. $y' + xy = xy^{-1}, \quad y(0) = 3$
24. $y' + y = -x/y$
25. $y' = 3.2y - 10y^2$
26. $y' = (\tan y)/(x - 1), \quad y(0) = \frac{1}{2}\pi$
27. $y' = 1/(6e^y - 2x)$
28. $2xyy' + (x - 1)y^2 = x^2 e^x \quad (\text{Set } y^2 = z)$

CHAPTER 1 REVIEW QUESTIONS AND PROBLEMS

17. $y' + 2.5y = 1.6x$

18. $y' - 0.4y = 29 \sin x$

19. $25yy' - 4x = 0$

20. $y' = ay + by^2 \quad (a \neq 0)$

21. $(3xe^y + 2y)\,dx + (x^2e^y + x)\,dy = 0$

22. $y' + 4xy = e^{-2x^2}, \quad y(0) = -4.3$

23. $y' = \sqrt{1 - y^2}, \quad y(0) = 1/\sqrt{2}$

24. $y' + \frac{1}{2}y = y^3, \quad y(0) = \frac{1}{3}$

25. $3 \sec y\,dx + \frac{1}{3} \sec x\,dy = 0, \quad y(0) = 0$

26. $x \sinh y\,dy = \cosh y\,dx, \quad y(3) = 0$

Second-Order Linear ODEs

Linear Second-order DE

A second-order ODE is called **linear** if it can be written

(1) $$y'' + p(x)y' + q(x)y = r(x)$$

Homogeneous

(2) $$y'' + p(x)y' + q(x)y = 0$$

Nonhomogeneous

$$y'' + p(x)y' + q(x)y = r(x)$$

Linear Second-order DE

a homogeneous linear ODE is

$$xy'' + y' + xy = 0, \qquad \text{written in standard form} \qquad y'' + \frac{1}{x}y' + y = 0.$$

nonhomogeneous linear ODE is

$$y'' + 25y = e^{-x}\cos x,$$

Principle of superposition

- For *linear and homogenous* differential equation, the *linear combination* of two solutions is also a solution.

The functions $y = \cos x$ and $y = \sin x$ are solutions of the homogeneous linear ODE

$$y'' + y = 0$$

for all x. We verify this by differentiation and substitution. We obtain $(\cos x)'' = -\cos x$; hence

$$y'' + y = (\cos x)'' + \cos x = -\cos x + \cos x = 0.$$

Similarly for $y = \sin x$

$y = c_1 y_1 + c_2 y_2$ called a **linear combination** of y_1 and y_2

$$(4.7 \cos x - 2 \sin x)'' + (4.7 \cos x - 2 \sin x) = -4.7 \cos x + 2 \sin x + 4.7 \cos x - 2 \sin x = 0.$$

Initial Value Problem. Basis. General Solution

- For a second-order homogeneous linear ODE: an initial value problem consists of two initial conditions:

$$y(x_0) = K_0, \qquad y'(x_0) = K_1.$$

- Two the initial conditions are used to determine the two arbitrary constants c_1 and c_2 in a **general solution**

$$y = c_1 y_1 + c_2 y_2$$

Initial Value Problem. Basis. General Solution

$$\boxed{y'' + y = 0, \qquad y(0) = 3.0, \qquad y'(0) = -0.5.}$$

Step 1. General solution. The functions $\cos x$ and $\sin x$ are solutions of the ODE (by Example 1),

$$y = c_1 \cos x + c_2 \sin x.$$

This will turn out to be a general solution as defined below.

Step 2. Particular solution. We need the derivative $y' = -c_1 \sin x + c_2 \cos x$. From this and the initial values we obtain, since $\cos 0 = 1$ and $\sin 0 = 0$,

$$y(0) = c_1 = 3.0 \qquad \text{and} \qquad y'(0) = c_2 = -0.5.$$

This gives as the solution of our initial value problem the particular solution

$$y = 3.0 \cos x - 0.5 \sin x.$$

page: 49

Homogeneous Linear ODEs with Constant Coefficients

(1) $$y'' + ay' + by = 0.$$

coefficients a and b are constant

(2) $$y = e^{\lambda x}.$$

characteristic equation

(3) $$\lambda^2 + a\lambda + b = 0$$

(4) $$\lambda_1 = \tfrac{1}{2}\left(-a + \sqrt{a^2 - 4b}\right), \qquad \lambda_2 = \tfrac{1}{2}\left(-a - \sqrt{a^2 - 4b}\right).$$

(5) $$y_1 = e^{\lambda_1 x} \qquad \text{and} \qquad y_2 = e^{\lambda_2 x}$$

Homogeneous Linear ODEs with Constant Coefficients

$$\lambda^2 + a\lambda + b = 0$$

(Case I) *Two real roots if* $a^2 - 4b > 0$,
(Case II) *A real double root if* $a^2 - 4b = 0$,
(Case III) *Complex conjugate roots if* $a^2 - 4b < 0$.

Case	Roots of (2)	Basis of (1)	General Solution of (1)
I	Distinct real λ_1, λ_2	$e^{\lambda_1 x}, e^{\lambda_2 x}$	$y = c_1 e^{\lambda_1 x} + c_2 e^{\lambda_2 x}$
II	Real double root $\lambda = -\frac{1}{2}a$	$e^{-ax/2}, xe^{-ax/2}$	$y = (c_1 + c_2 x)e^{-ax/2}$
III	Complex conjugate $\lambda_1 = -\frac{1}{2}a + i\omega$, $\lambda_2 = -\frac{1}{2}a - i\omega$	$e^{-ax/2}\cos\omega x$ $e^{-ax/2}\sin\omega x$	$y = e^{-ax/2}(A\cos\omega x + B\sin\omega x)$

Initial Value Problem in the Case of Distinct Real Roots

Solve the initial value problem

$$y'' + y' - 2y = 0, \qquad y(0) = 4, \qquad y'(0) = -5.$$

Solution. ***Step 1. General solution.*** The characteristic equation is

$$\lambda^2 + \lambda - 2 = 0.$$

Its roots are

$$\lambda_1 = \tfrac{1}{2}(-1 + \sqrt{9}) = 1 \qquad \text{and} \qquad \lambda_2 = \tfrac{1}{2}(-1 - \sqrt{9}) = -2$$

so that we obtain the general solution

$$y = c_1 e^x + c_2 e^{-2x}.$$

Step 2. Particular solution. Since $y'(x) = c_1 e^x - 2c_2 e^{-2x}$, we obtain from the general solution and the initial conditions

$$y(0) = c_1 + c_2 = 4,$$
$$y'(0) = c_1 - 2c_2 = -5.$$

Hence $c_1 = 1$ and $c_2 = 3$. This gives the *answer* $y = e^x + 3e^{-2x}$.

Initial Value Problem in the Case of a Double Root

Solve the initial value problem

$$y'' + y' + 0.25y = 0, \qquad y(0) = 3.0, \quad y'(0) = -3.5.$$

Solution. The characteristic equation is $\lambda^2 + \lambda + 0.25 = (\lambda + 0.5)^2 = 0$. It has the double root $\lambda = -0.5$. This gives the general solution

$$y = (c_1 + c_2 x)e^{-0.5x}.$$

We need its derivative

$$y' = c_2 e^{-0.5x} - 0.5(c_1 + c_2 x)e^{-0.5x}.$$

From this and the initial conditions we obtain

$$y(0) = c_1 = 3.0, \qquad y'(0) = c_2 - 0.5c_1 = 3.5; \qquad \text{hence} \qquad c_2 = -2.$$

The particular solution of the initial value problem is $y = (3 - 2x)e^{-0.5x}$

Complex Roots. Initial Value Problem

Solve the initial value problem

$$y'' + 0.4y' + 9.04y = 0, \qquad y(0) = 0, \qquad y'(0) = 3.$$

Solution. ***Step 1. General solution.*** The characteristic equation is $\lambda^2 + 0.4\lambda + 9.04 = 0$. It has the roots $-0.2 \pm 3i$. Hence $\omega = 3$, and a general solution (9) is

$$y = e^{-0.2x}(A \cos 3x + B \sin 3x).$$

Step 2. Particular solution. The first initial condition gives $y(0) = A = 0$. The remaining expression is $y = Be^{-0.2x} \sin 3x$. We need the derivative (chain rule!)

$$y' = B(-0.2e^{-0.2x} \sin 3x + 3e^{-0.2x} \cos 3x).$$

From this and the second initial condition we obtain $y'(0) = 3B = 3$. Hence $B = 1$. Our solution is

$$y = e^{-0.2x} \sin 3x.$$

Differential Operators.

$$Dy = y' = \frac{dy}{dx}$$

$$D^2y = D(Dy) = y''$$

I is the **identity operator** defined by $Iy = y$

PROBLEM SET 2.2

1. $4y'' - 25y = 0$
2. $y'' + 36y = 0$
3. $y'' + 6y' + 8.96y = 0$
4. $y'' + 4y' + (\pi^2 + 4)y = 0$
5. $y'' + 2\pi y' + \pi^2 y = 0$
6. $10y'' - 32y' + 25.6y = 0$
7. $y'' + 4.5y' = 0$
8. $y'' + y' + 3.25y = 0$
9. $y'' + 1.8y' - 2.08y = 0$
10. $100y'' + 240y' + (196\pi^2 + 144)y = 0$
11. $4y'' - 4y' - 3y = 0$
12. $y'' + 9y' + 20y = 0$
13. $9y'' - 30y' + 25y = 0$
14. $y'' + 2k^2y' + k^4y = 0$
15. $y'' + 0.54y' + (0.0729 + \pi)y = 0$
21. $y'' + 25y = 0, \quad y(0) = 4.6, \quad y'(0) = -1.2$
22. The ODE in Prob. 4, $\quad y(\frac{1}{2}) = 1, \quad y'(\frac{1}{2}) = -2$
23. $y'' + y' - 6y = 0, \quad y(0) = 10, \quad y'(0) = 0$
24. $4y'' - 4y' - 3y = 0, \quad y(-2) = e, \quad y'(-2) = -e/2$
25. $y'' - y = 0, \quad y(0) = 2, \quad y'(0) = -2$
26. $y'' - k^2y = 0 \ (k \neq 0), \quad y(0) = 1, \quad y'(0) = 1$

PROBLEM SET 2.3

6. $(D^2 + 4.00D + 3.36I)y = 0$
7. $(4D^2 - I)y = 0$
8. $(D^2 + 3I)y = 0$
9. $(D^2 - 4.20D + 4.41I)y = 0$
10. $(D^2 + 4.80D + 5.76I)y = 0$
11. $(D^2 - 4.00D + 3.84I)y = 0$
12. $(D^2 + 3.0D + 2.5I)y = 0$

Euler–Cauchy Equations

Euler–Cauchy equations[4] are ODEs of the form

$$x^2y'' + axy' + by = 0 \tag{1}$$

$$y = x^m, \qquad y' = mx^{m-1}, \qquad y'' = m(m-1)x^{m-2}$$

$$x^2m(m-1)x^{m-2} + axmx^{m-1} + bx^m = 0$$

$$m^2 + (a-1)m + b = 0.$$

page: 71

Euler–Cauchy equations[4] are ODEs of the form

$$x^2y'' + axy' + by = 0 \tag{1}$$

$$m^2 + (a - 1)m + b = 0.$$

Case I. Real different roots m_1 and m_2 give two real solutions

$$y_1(x) = x^{m_1} \quad \text{and} \quad y_2(x) = x^{m_2}.$$

$$y = c_1x^{m_1} + c_2x^{m_2}$$

page: 71

Euler–Cauchy equations[4] are ODEs of the form

$$x^2y'' + axy' + by = 0 \tag{1}$$

$$m^2 + (a - 1)m + b = 0.$$

Case II. A real double root $m_1 = \frac{1}{2}(1 - a)$

$$y = (c_1 + c_2 \ln x)\, x^m, \qquad m = \tfrac{1}{2}(1 - a).$$

Case III. Complex conjugate roots are of minor practical importance.

page: 72

PROBLEM SET 2.5

2. $x^2y'' - 20y = 0$
3. $5x^2y'' + 23xy' + 16.2y = 0$
4. $xy'' + 2y' = 0$
5. $4x^2y'' + 5y = 0$
6. $x^2y'' + 0.7xy' - 0.1y = 0$
7. $(x^2D^2 - 4xD + 6I)y = C$
8. $(x^2D^2 - 3xD + 4I)y = 0$
9. $(x^2D^2 - 0.2xD + 0.36I)y = 0$
10. $(x^2D^2 - xD + 5I)y = 0$
11. $(x^2D^2 - 3xD + 10I)y = 0$
12. $x^2y'' - 4xy' + 6y = 0, \quad y(1) = 0.4, \quad y'(1) = 0$
13. $x^2y'' + 3xy' + 0.75y = 0, \quad y(1) = 1,$
    $y'(1) = -1.5$
14. $x^2y'' + xy' + 9y = 0, \quad y(1) = 0, \quad y'(1) = 2.5$
15. $x^2y'' + 3xy' + y = 0, \quad y(1) = 3.6, \quad y'(1) = 0.4$
16. $(x^2D^2 - 3xD + 4I)y = 0, \quad y(1) = -\pi, \quad y'(1) = 2\pi$
17. $(x^2D^2 + xD + I)y = 0, \quad y(1) = 1, \quad y'(1) = 1$
18. $(9x^2D^2 + 3xD + I)y = 0, \quad y(1) = 1, \quad y'(1) = 0$
19. $(x^2D^2 - xD - 15I)y = 0, \quad y(1) = 0.1,$
    $y'(1) = -4.5$

Nonhomogeneous ODEs

(1) $$y'' + p(x)y' + q(x)y = r(x)$$

where $r(x) \not\equiv 0$. We shall see that a "general solution" of (1) is the sum of a general solution of the corresponding homogeneous ODE

(2) $$y'' + p(x)y' + q(x)y = 0$$

General Solution, Particular Solution

A **general solution** of the nonhomogeneous ODE (1) on an open interval I is a solution of the form

(3) $$y(x) = y_h(x) + y_p(x);$$

here, $y_h = c_1y_1 + c_2y_2$ is a general solution of the homogeneous ODE (2) on I and y_p is any solution of (1) on I containing no arbitrary constants.

A **particular solution** of (1) on I is a solution obtained from (3) by assigning specific values to the arbitrary constants c_1 and c_2 in y_h.

(4) $$y'' + ay' + by = r(x)$$

Choice Rules for the Method of Undetermined Coefficients

(a) Basic Rule. *If $r(x)$ in (4) is one of the functions in the first column in Table 2.1, choose y_p in the same line and determine its undetermined coefficients by substituting y_p and its derivatives into (4).*

(b) Modification Rule. *If a term in your choice for y_p happens to be a solution of the homogeneous ODE corresponding to (4), multiply this term by x (or by x^2 if this solution corresponds to a double root of the characteristic equation of the homogeneous ODE).*

(c) Sum Rule. *If $r(x)$ is a sum of functions in the first column of Table 2.1, choose for y_p the sum of the functions in the corresponding lines of the second column.*

- Nếu y_p được chọn theo bảng trùng với <u>*dạng nghiệm cơ sở*</u> thì ta nhân thêm cho x hoặc x^2.
- Nếu $r(x)$ là tổng của các hàm trong cột 1 thì chọn y_p là tổng của các hàm tương ứng trong cột 2.

Method of Undetermined Coefficients

Table 2.1 Method of Undetermined Coefficients

Term in $r(x)$	Choice for $y_p(x)$
$ke^{\gamma x}$	$Ce^{\gamma x}$
$kx^n \ (n = 0, 1, \cdots)$	$K_n x^n + K_{n-1}x^{n-1} + \cdots + K_1 x + K_0$
$k \cos \omega x$ $k \sin \omega x$	$K \cos \omega x + M \sin \omega x$
$ke^{\alpha x} \cos \omega x$ $ke^{\alpha x} \sin \omega x$	$e^{\alpha x}(K \cos \omega x + M \sin \omega x)$

Application of the Basic Rule (a)

Solve the initial value problem

$$y'' + y = 0.001x^2, \qquad y(0) = 0, \qquad y'(0) = 1.5. \tag{5}$$

Solution. ***Step 1. General solution of the homogeneous ODE.*** The ODE $y'' + y = 0$ has the general solution

$$y_h = A \cos x + B \sin x.$$

Step 2. Solution y_p of the nonhomogeneous ODE.

The second line in Table 2.1 suggests the choice

$$y_p = K_2x^2 + K_1x + K_0. \qquad \text{Then} \qquad y_p'' + y_p = 2K_2 + K_2x^2 + K_1x + K_0 = 0.001x^2.$$

$K_2 = 0.001$, $K_1 = 0$, $K_0 = -2K_2 = -0.002$.

$$y = y_h + y_p = A \cos x + B \sin x + 0.001x^2 - 0.002.$$

Step 3. Solution of the initial value problem. $A = 0.002$ $\quad y'(0) = B = 1.5.$

$$y = 0.002 \cos x + 1.5 \sin x + 0.001x^2 - 0.002.$$

page 82

Application of the Modification Rule (b)

Solve the initial value problem

$$y'' + 3y' + 2.25y = -10e^{-1.5x}, \qquad y(0) = 1, \qquad y'(0) = 0. \tag{6}$$

Solution. ***Step 1. General solution of the homogeneous ODE.*** The characteristic equation of the homogeneous ODE is $\lambda^2 + 3\lambda + 2.25 = (\lambda + 1.5)^2 = 0$. Hence the homogeneous ODE has the general solution

$$y_h = (c_1 + c_2 x)e^{-1.5x}.$$

Step 2. Solution y_p of the nonhomogeneous ODE. The function $e^{-1.5x}$ on the right would normally require the choice $Ce^{-1.5x}$. But we see from y_h that this function is a solution of the homogeneous ODE, which corresponds to a *double root* of the characteristic equation. Hence, according to the Modification Rule we have to multiply our choice function by x^2. That is, we choose

$$y_p = Cx^2e^{-1.5x}. \qquad \text{Then} \qquad y_p' = C(2x - 1.5x^2)e^{-1.5x}, \qquad y_p'' = C(2 - 3x - 3x + 2.25x^2)e^{-1.5x}.$$

$$C(2 - 6x + 2.25x^2) + 3C(2x - 1.5x^2) + 2.25Cx^2 = -10. \quad \text{hence } C = -5.$$

Step 3. Solution of the initial value problem.

$y(0) = c_1 = 1 \qquad y'(0) = c_2 - 1.5c_1 = 0$. Hence $c_2 = 1.5c_1 = 1.5$.

$$y = (1 + 1.5x)e^{-1.5x} - 5x^2e^{-1.5x} = (1 + 1.5x - 5x^2)e^{-1.5x}.$$

Application of the Sum Rule (c)

Solve the initial value problem

$$y'' + 2y' + 0.75y = 2\cos x - 0.25\sin x + 0.09x, \qquad y(0) = 2.78, \qquad y'(0) = -0.43. \tag{7}$$

Solution. ***Step 1. General solution of the homogeneous ODE.*** The characteristic equation of the homogeneous ODE is

$$\lambda^2 + 2\lambda + 0.75 = (\lambda + \tfrac{1}{2})(\lambda + \tfrac{3}{2}) = 0$$

which gives the general solution $y_h = c_1 e^{-x/2} + c_2 e^{-3x/2}$.

Step 2. Particular solution of the nonhomogeneous ODE. We write $y_p = y_{p1} + y_{p2}$ and, following Table 2.1, (C) and (B),

$$y_{p1} = K\cos x + M\sin x \qquad \text{and} \qquad y_{p2} = K_1 x + K_0.$$

Differentiation gives $y'_{p1} = -K\sin x + M\cos x$, $y''_{p1} = -K\cos x - M\sin x$ and $y'_{p2} = 1$, $y''_{p2} = 0$. Substitution of y_{p1} into the ODE in (7) gives, by comparing the cosine and sine terms,

$$-K + 2M + 0.75K = 2, \qquad -M - 2K + 0.75M = -0.25,$$

hence $K = 0$ and $M = 1$. Substituting y_{p2} into the ODE in (7) and comparing the x- and x^0-terms gives

$$0.75K_1 = 0.09, \quad 2K_1 + 0.75K_0 = 0, \qquad \text{thus} \qquad K_1 = 0.12, \quad K_0 = -0.32.$$

Hence a general solution of the ODE in (7) is

$$y = c_1 e^{-x/2} + c_2 e^{-3x/2} + \sin x + 0.12x - 0.32.$$

Step 3. Solution of the initial value problem. $c_1 = 3.1$, $c_2 = 0$. $\quad y = 3.1e^{-x/2} + \sin x + 0.12x - 0.32.$

PROBLEM SET 2.7

1. $y'' + 5y' + 4y = 10e^{-3x}$
2. $10y'' + 50y' + 57.6y = \cos x$
3. $y'' + 3y' + 2y = 12x^2$
4. $y'' - 9y = 18 \cos \pi x$
5. $y'' + 4y' + 4y = e^{-x} \cos x$
6. $y'' + y' + (\pi^2 + \frac{1}{4})y = e^{-x/2} \sin \pi x$
7. $(D^2 + 2D + \frac{3}{4}I)y = 3e^x + \frac{9}{2}x$
8. $(3D^2 + 27I)y = 3 \cos x + \cos 3x$
9. $(D^2 - 16I)y = 9.6e^{4x} + 30e^x$
10. $(D^2 + 2D + I)y = 2x \sin x$
11. $y'' + 3y = 18x^2, \quad y(0) = -3, \quad y'(0) = 0$
12. $y'' + 4y = -12 \sin 2x, \quad y(0) = 1.8, \quad y'(0) = 5.0$
13. $8y'' - 6y' + y = 6 \cosh x, \quad y(0) = 0.2,$
    $y'(0) = 0.05$
14. $y'' + 4y' + 4y = e^{-2x} \sin 2x, \quad y(0) = 1,$
    $y'(0) = -1.5$
15. $(x^2D^2 - 3xD + 3I)y = 3 \ln x - 4,$
    $y(1) = 0, \quad y'(1) = 1; \quad y_p = \ln x$
16. $(D^2 - 2D)y = 6e^{2x} - 4e^{-2x}, \quad y(0) = -1, \quad y'(0) = 6$
17. $(D^2 + 0.2D + 0.26I)y = 1.22e^{0.5x}, \quad y(0) = 3.5,$
    $y'(0) = 0.35$

Modeling: Electric Circuits

- Pages: 93-97

$$L\frac{di}{dt} + Ri + \frac{1}{C}q = E(t).$$

$$i = dq/dt$$

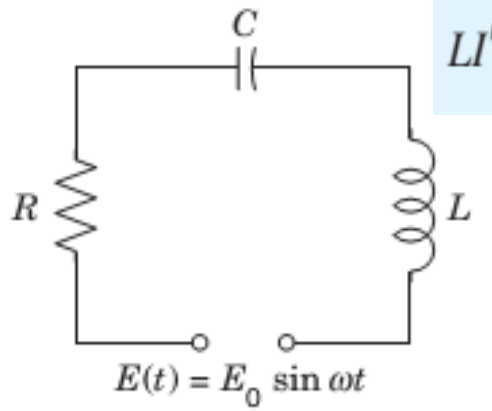

Fig. 61. *RLC*-circuit

$$LI'' + RI' + \frac{1}{C}I = E'(t) = E_0\omega\cos\omega t.$$

$$L\frac{d^2q}{dt^2} + R\frac{dq}{dt} + \frac{1}{C}q = E(t).$$

Name	Symbol	Notation		Unit	Voltage Drop
Ohm's Resistor		R	Ohm's Resistance	ohms (Ω)	RI
Inductor		L	Inductance	henrys (H)	$L\frac{dI}{dt}$
Capacitor	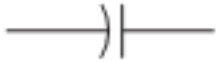	C	Capacitance	farads (F)	Q/C

Fig. 62. Elements in an *RLC*-circuit

Modeling: Electric Circuits

RLC-Circuit

Find the current $I(t)$ in an *RLC*-circuit with $R = 11\ \Omega$ (ohms), $L = 0.1$ H (henry), $C = 10^{-2}$ F (farad), which is connected to a source of EMF $E(t) = 110 \sin(60 \cdot 2\pi t) = 110 \sin 377\, t$ (hence 60 Hz = 60 cycles/sec, the usual in the U.S. and Canada; in Europe it would be 220 V and 50 Hz). Assume that current and capacitor charge are 0 when $t = 0$.

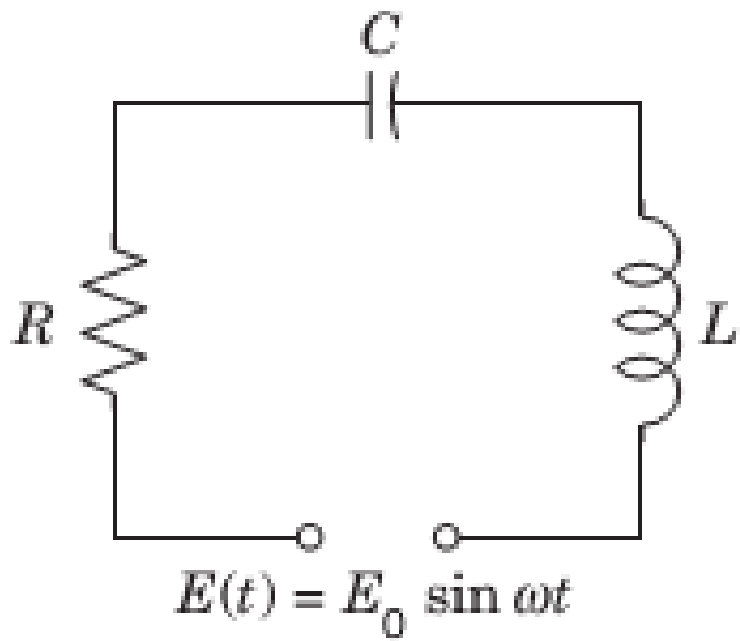

Fig. 61. *RLC*-circuit

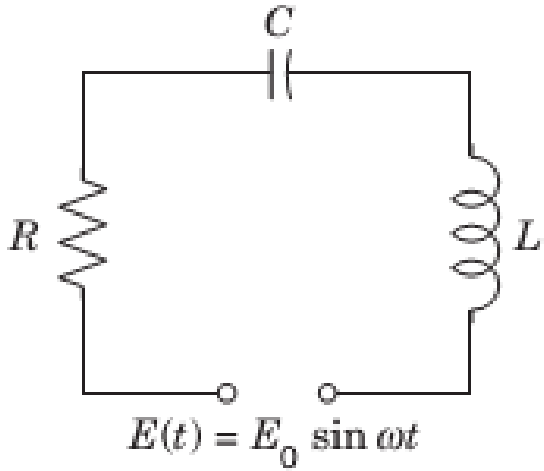

Fig. 61. *RLC*-circuit

Solution. ***Step 1. General solution of the homogeneous ODE.*** Substituting R, L, C and the derivative $E'(t)$ into (1), we obtain

$$0.1I'' + 11I' + 100I = 110 \cdot 377 \cos 377t.$$

Hence the homogeneous ODE is $0.1I'' + 11I' + 100I = 0$. Its characteristic equation is

$$0.1\lambda^2 + 11\lambda + 100 = 0.$$

The roots are $\lambda_1 = -10$ and $\lambda_2 = -100$. The corresponding general solution of the homogeneous ODE is

$$I_h(t) = c_1 e^{-10t} + c_2 e^{-100t}.$$

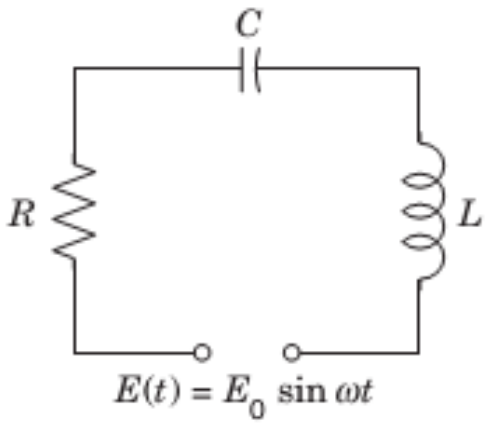

$$S = \omega L - \frac{1}{\omega C} \qquad a = \frac{-E_0 S}{R^2 + S^2}, \qquad b = \frac{E_0 R}{R^2 + S^2}$$

Fig. 61. *RLC*-circuit

Step 2. Particular solution I_p of (1). We calculate the reactance $S = 37.7 - 0.3 = 37.4$ and the steady-state current

$$I_p(t) = a \cos 377t + b \sin 377t$$

with coefficients obtained from (4) (and rounded)

$$a = \frac{-110 \cdot 37.4}{11^2 + 37.4^2} = -2.71, \qquad b = \frac{110 \cdot 11}{11^2 + 37.4^2} = 0.796.$$

Hence in our present case, a general solution of the nonhomogeneous ODE (1) is

$$I(t) = c_1 e^{-10t} + c_2 e^{-100t} - 2.71 \cos 377t + 0.796 \sin 377t. \tag{6}$$

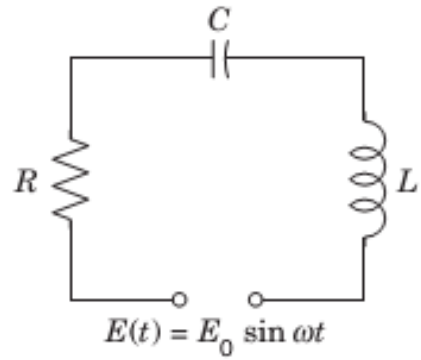

Fig. 61. *RLC*-circuit

Step 3. Particular solution satisfying the initial conditions. **How to use $Q(0) = 0$?** We finally determine c_1 and c_2 from the in initial conditions $I(0) = 0$ and $Q(0) = 0$. From the first condition and (6) we have

$$I(0) = c_1 + c_2 - 2.71 = 0, \qquad \text{hence} \qquad c_2 = 2.71 - c_1. \tag{7}$$

We turn to $Q(0) = 0$. The integral in $(1')$ equals $\int I\,dt = Q(t)$; see near the beginning of this section. Hence for $t = 0$, Eq. $(1')$ becomes

$$LI'(0) + R \cdot 0 = 0, \qquad \text{so that} \qquad I'(0) = 0.$$

Differentiating (6) and setting $t = 0$, we thus obtain

$$I'(0) = -10c_1 - 100c_2 + 0 + 0.796 \cdot 377 = 0, \qquad \text{hence by (7)}, \qquad -10c_1 = 100(2.71 - c_1) - 300.1.$$

The solution of this and (7) is $c_1 = -0.323$, $c_2 = 3.033$. Hence the answer is

$$I(t) = -0.323e^{-10t} + 3.033e^{-100t} - 2.71 \cos 377t + 0.796 \sin 377t.$$

EXAMPLE

Find the charge $q(t)$ on the capacitor in an LRC-series circuit when $L = 0.25$ henry (h), $R = 10$ ohms (Ω), $C = 0.001$ farad (f), $E(t) = 0$ volts (V), $q(0) = q_0$ coulombs (C), and $i(0) = 0$ amperes (A).

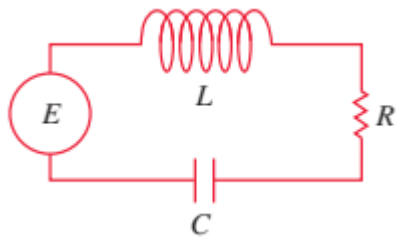

$$L\frac{d^2q}{dt^2} + R\frac{dq}{dt} + \frac{1}{C}q = E(t).$$

SOLUTION Since $1/C = 1000$,

$$\frac{1}{4}q'' + 10q' + 1000q = 0 \qquad \text{or} \qquad q'' + 40q' + 4000q = 0.$$

$$q(t) = e^{-20t}(c_1 \cos 60t + c_2 \sin 60t).$$

Applying the initial conditions, we find $c_1 = q_0$ and $c_2 = q_0/3$

$$q(t) = q_0 e^{-20t}(\cos 60t + \tfrac{1}{3}\sin 60t).$$

PROBLEM SET 2.9

8–14 Find the **steady-state current** in the *RLC*-circuit in Fig. 61 for the given data. Show the details of your work.

8. $R = 4\ \Omega$, $L = 0.5$ H, $C = 0.1$ F, $E = 500 \sin 2t$ V

9. $R = 4\ \Omega$, $L = 0.1$ H, $C = 0.05$ F, $E = 110$ V

10. $R = 2\ \Omega$, $L = 1$ H, $C = \frac{1}{20}$ F, $E = 157 \sin 3t$ V

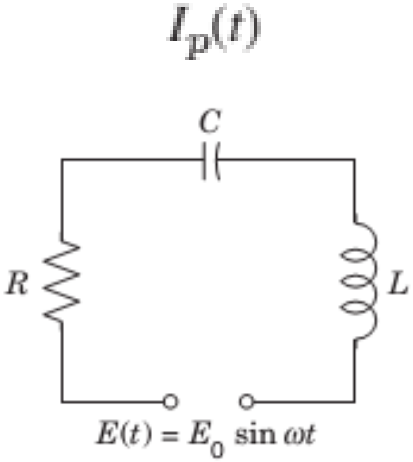

Fig. 61. *RLC*-circuit

11. $R = 12\ \Omega$, $L = 0.4$ H, $C = \frac{1}{80}$ F, $E = 220 \sin 10t$ V

12. $R = 0.2\ \Omega$, $L = 0.1$ H, $C = 2$ F, $E = 220 \sin 314t$ V

13. $R = 12$, $L = 1.2$ H, $C = \frac{20}{3} \cdot 10^{-3}$ F, $E = 12{,}000 \sin 25t$ V

16. $R = 8\ \Omega$, $L = 0.2$ H, $C = 12.5 \cdot 10^{-3}$ F, $E = 100 \sin 10t$ V

17. $R = 6\ \Omega$, $L = 1$ H, $C = 0.04$ F, $E = 600 (\cos t + 4 \sin t)$ V

18. $R = 18\ \Omega$, $L = 1$ H, $C = 12.5 \cdot 10^{-3}$ F, $E = 820 \cos 10t$ V

CHAPTER 2 REVIEW QUESTIONS AND PROBLEMS

7. $4y'' + 32y' + 63y = 0$
8. $y'' + y' - 12y = 0$
9. $y'' + 6y' + 34y = 0$
10. $y'' + 0.20y' + 0.17y = 0$
11. $(100D^2 - 160D + 64I)y = 0$
12. $(D^2 + 4\pi D + 4\pi^2 I)y = 0$
13. $(x^2D^2 + 2xD - 12I)y = 0$
14. $(x^2D^2 + xD - 9I)y = 0$
15. $(2D^2 - 3D - 2I)y = 13 - 2x^2$
16. $(D^2 + 2D + 2I)y = 3e^{-x}\cos 2x$
17. $(4D^2 - 12D + 9I)y = 2e^{1.5x}$
18. $yy'' = 2y'^2$
19. $y'' + 16y = 17e^x, \quad y(0) = 6, \quad y'(0) = -2$
20. $y'' - 3y' + 2y = 10 \sin x, \quad y(0) = 1, \quad y'(0) = -6$
21. $(x^2D^2 + xD - I)y = 16x^3, \quad y(1) = -1, \quad y'(1) = 1$
22. $(x^2D^2 + 15xD + 49I)y = 0, \quad y(1) = 2,$ $y'(1) = -11$
23. Find the steady-state current in the *RLC*-circuit in Fig. 71 when $R = 2\,\text{k}\Omega$ (2000 Ω), $L = 1$ H, $C = 4 \cdot 10^{-3}$ F, and $E = 110 \sin 415t$ V (66 cycles/sec).
24. Find a general solution of the homogeneous linear ODE corresponding to the ODE in Prob. 23.
25. Find the steady-state current in the *RLC*-circuit in Fig. 71 when $R = 50\,\Omega$, $L = 30$ H, $C = 0.025$ F, $E = 200 \sin 4t$ V.

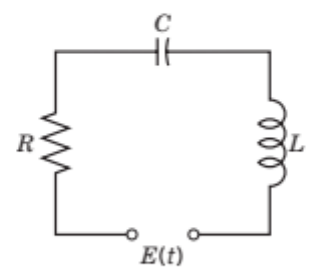

Fig. 71. *RLC*-circuit

26. Find the current in the *RLC*-circuit in Fig. 71 when $R = 40\,\Omega$, $L = 0.4$ H, $C = 10^{-4}$ F, $E = 220 \sin 314t$ V (50 cycles/sec).

Higher Order Linear ODEs

Homogeneous Linear ODEs

$$F(x, y, y', \cdots, y^{(n)}) = 0$$

Linear

(1) $$y^{(n)} + p_{n-1}(x)y^{(n-1)} + \cdots + p_1(x)y' + p_0(x)y = r(x).$$

Linear-homogeneous.

(2) $$y^{(n)} + p_{n-1}(x)y^{(n-1)} + \cdots + p_1(x)y' + p_0(x)y = 0$$

→ Apply Superposition Principle →General Solution (Section 3.1)

Solve the fourth-order ODE

$$y^{\text{iv}} - 5y'' + 4y = 0 \qquad (\text{where } y^{\text{iv}} = d^4y/dx^4).$$

Solution. As in Sec. 2.2 we substitute $y = e^{\lambda x}$. Omitting the common factor $e^{\lambda x}$, we obtain the characteristic equation

$$\lambda^4 - 5\lambda^2 + 4 = 0.$$

This is a quadratic equation in $\mu = \lambda^2$, namely,

$$\mu^2 - 5\mu + 4 = (\mu - 1)(\mu - 4) = 0.$$

The roots are $\mu = 1$ and 4. Hence $\lambda = -2, -1, 1, 2$. This gives four solutions. A general solution on any interval is

$$y = c_1e^{-2x} + c_2e^{-x} + c_3e^{x} + c_4e^{2x}$$

Refer Pape 107

Homogeneous Linear ODEs with Constant Coefficients

(1) $$y^{(n)} + a_{n-1}y^{(n-1)} + \cdots + a_1 y' + a_0 y = 0$$

The characteristic equation

(2) $$\lambda^{(n)} + a_{n-1}\lambda^{(n-1)} + \cdots + a_1 \lambda + a_0 y = 0$$

Distinct Real Roots

If all the n roots $\lambda_1, \cdots, \lambda_n$ of (2) are real and different, then the n solutions

(3) $$y_1 = e^{\lambda_1 x}, \qquad \cdots, \qquad y_n = e^{\lambda_n x}.$$

constitute a basis for all x. The corresponding general solution of (1) is

(4) $$y = c_1 e^{\lambda_1 x} + \cdots + c_n e^{\lambda_n x}.$$

Simple Complex Roots

Multiple Real Roots

Multiple Complex Roots

Nonhomogeneous Linear ODEs

$$y^{(n)} + p_{n-1}(x)y^{(n-1)} + \cdots + p_1(x)y' + p_0(x)y = r(x) \tag{1}$$

with $y^{(n)} = d^n y/dx^n$ as the first term, and $r(x) \neq 0$. As for second-order ODEs, a general solution of (1) on an open interval I of the x-axis is of the form

$$y(x) = y_h(x) + y_p(x). \tag{2}$$

Here $y_h(x) = c_1 y_1(x) + \cdots + c_n y_n(x)$ is a general solution of the corresponding homogeneous ODE

$$y^{(n)} + p_{n-1}(x)y^{(n-1)} + \cdots + p_1(x)y' + p_0(x)y = 0 \tag{3}$$

on I. Also, y_p is any solution of (1) on I containing no arbitrary constants. If (1) has continuous coefficients and a continuous $r(x)$ on I, then a general solution of (1) exists and includes all solutions. Thus (1) has no singular solutions.

→Method of Undetermined Coefficients →$y_p(x)$

Systems of ODEs

$$\begin{cases} y_1' = a_{11}y_1 + a_{12}y_2 + \cdots + a_{1n}y_n + b_1 \\ y_2' = a_{21}y_1 + a_{22}y_2 + \cdots + a_{2n}y_n + b_2 \\ \vdots \\ y_n' = a_{n1}y_1 + a_{n2}y_2 + \cdots + a_{nn}y_n + b_n \end{cases}$$

$$\Leftrightarrow \boldsymbol{y}' = \boldsymbol{A}\boldsymbol{y} + \boldsymbol{b}$$

$$\boldsymbol{b} = \begin{pmatrix} b_1 \\ b_2 \\ \vdots \\ b_n \end{pmatrix} \qquad \boldsymbol{A} = \begin{pmatrix} a_{11} & a_{12} & \cdots & a_{1n} \\ a_{21} & a_{22} & \cdots & a_{2n} \\ \vdots & \vdots & \vdots & \vdots \\ a_{n1} & a_{n2} & \cdots & a_{nn} \end{pmatrix}; \boldsymbol{y} = \begin{pmatrix} y_1 \\ y_2 \\ \vdots \\ y_n \end{pmatrix}; \boldsymbol{y}' = \begin{pmatrix} y_1' \\ y_2' \\ \vdots \\ y_n' \end{pmatrix}$$

- Nghiệm phương trình vi phân (ma trận) không thuần nhất có dạng $\boldsymbol{y} = \boldsymbol{y}_h + \boldsymbol{y}_p$
- $\boldsymbol{y}_h$ là nghiệm của phương trình vi phân (ma trận) thuần nhất tương ứng.
- Nghiệm phương trình vi phân (ma trận) thuần nhất có dạng $\boldsymbol{y} = \boldsymbol{y}_h = \boldsymbol{x}e^{\lambda t}$ trong đó λ *là trị riêng* và $\boldsymbol{x}$ *là véc tơ riêng*.
- Trị riêng λ được xác định bởi pt đặc trưng: $det(\boldsymbol{A} - \lambda \boldsymbol{I}) = 0$
- Véc tơ riêng $\boldsymbol{x}$ được xác định bởi pt: $\boldsymbol{A}\boldsymbol{x} - \lambda \boldsymbol{x} = \boldsymbol{0}$

Electrical Network

- Find the currents $I_1(t)$ and $I_2(t)$ in the network in Fig. 79. Assume all currents and charges to be zero at t=0, the instant when the switch is closed.

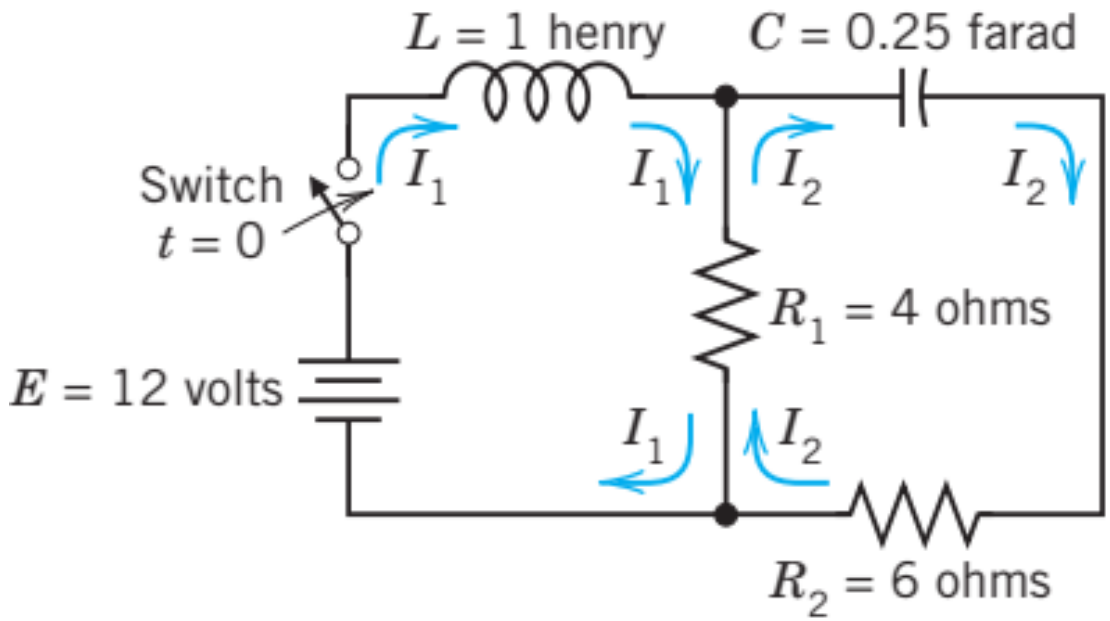

Fig. 79. Electrical network in Example 2

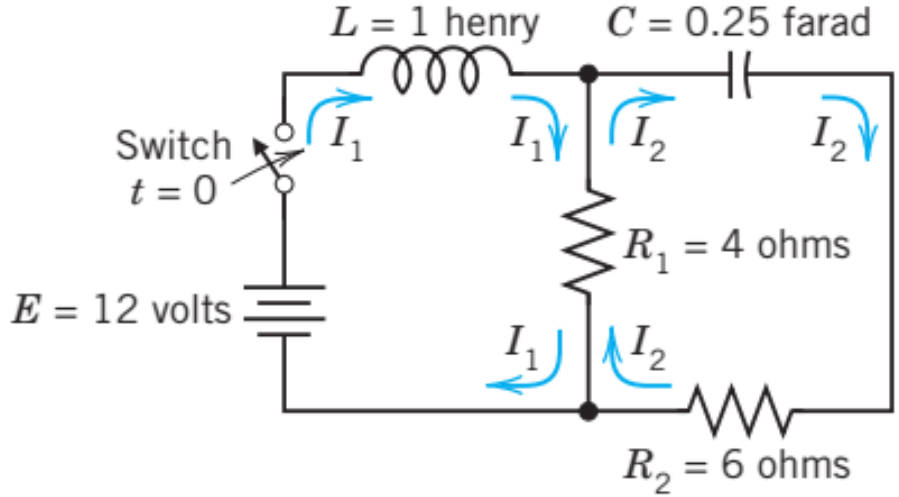

Solution. ***Step 1.*** **Setting up the mathematical model.** The model of this network is obtained from Kirchhoff's Voltage Law, as in Sec. 2.9 (where we considered single circuits). Let $I_1(t)$ and $I_2(t)$ be the currents in the left and right loops, respectively. In the left loop, the voltage drops are $LI_1' = I_1'$ [V] over the inductor and $R_1(I_1 - I_2) = 4(I_1 - I_2)$ [V] over the resistor, the difference because I_1 and I_2 flow through the resistor in opposite directions. By Kirchhoff's Voltage Law the sum of these drops equals the voltage of the battery; that is, $I_1' + 4(I_1 - I_2) = 12$, hence

$$\boxed{I_1' = -4I_1 + 4I_2 + 12.}$$

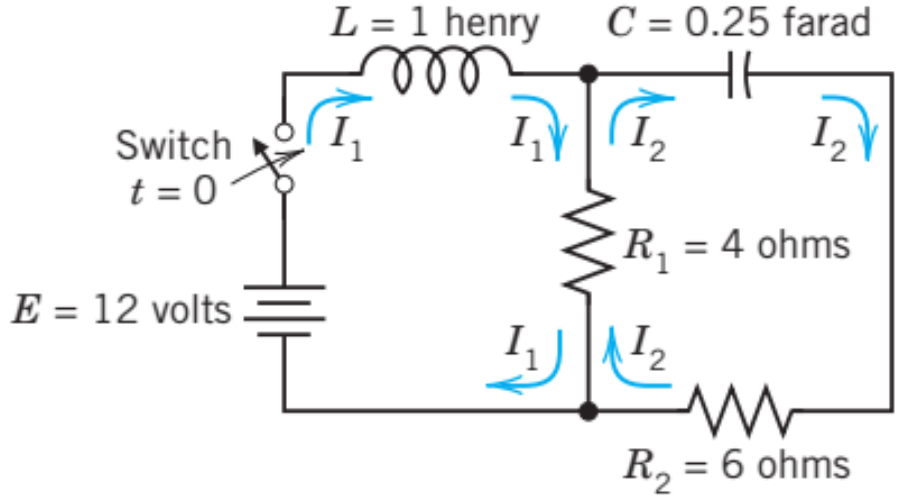

In the right loop, the voltage drops are $R_2I_2 = 6I_2$ [V] and $R_1(I_2 - I_1) = 4(I_2 - I_1)$ [V] over the resistors and $(I/C)\int I_2\,dt = 4\int I_2\,dt$ [V] over the capacitor, and their sum is zero,

$$6I_2 + 4(I_2 - I_1) + 4\int I_2\,dt = 0$$

$$10I_2 - 4I_1 + 4\int I_2\,dt = 0.$$

Division by 10 and differentiation gives $I_2' - 0.4I_1' + 0.4I_2 = 0.$

$$\boxed{I_2' = 0.4I_1' - 0.4I_2 = 0.4(-4I_1 + 4I_2 + 12) - 0.4I_2}$$

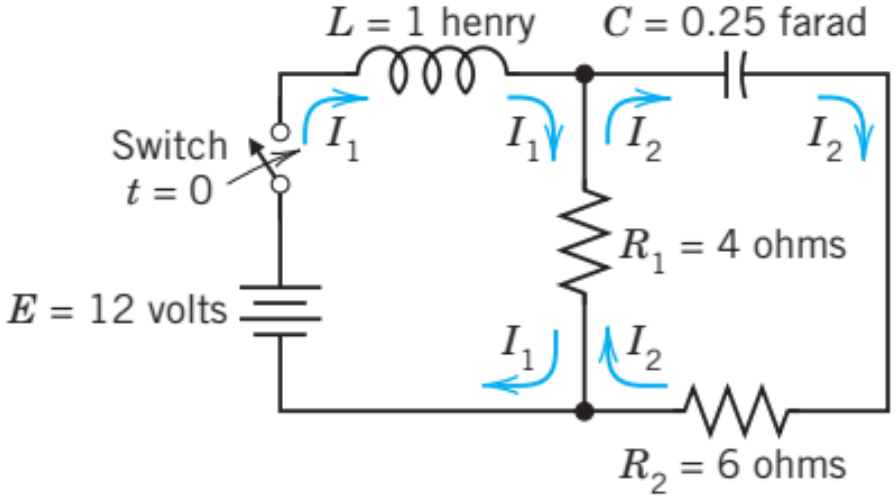

$$\boxed{I_1' = -4I_1 + 4I_2 + 12.}$$

$$\boxed{I_2' = -1.6I_1 + 1.2I_2 + 4.8.}$$

$$\boxed{\mathbf{J}' = \mathbf{A}\mathbf{J} + \mathbf{g}, \qquad \text{where} \qquad \mathbf{J} = \begin{bmatrix} I_1 \\ I_2 \end{bmatrix}, \quad \mathbf{A} = \begin{bmatrix} -4.0 & 4.0 \\ -1.6 & 1.2 \end{bmatrix}, \quad \mathbf{g} = \begin{bmatrix} 12.0 \\ 4.8 \end{bmatrix}.}$$

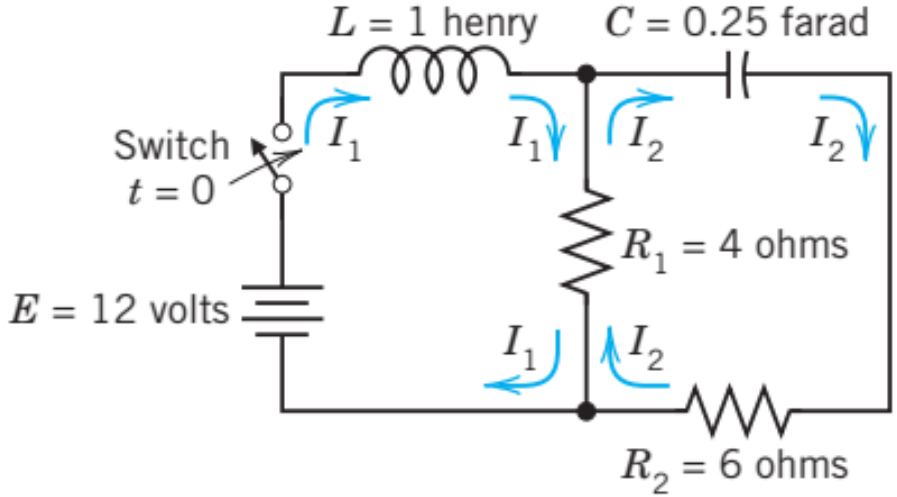

***Step 2.* Solving (5).** Because of the vector **g** this is a *nonhomogeneous* system, and we try to proceed as for a single ODE, solving first the *homogeneous* system $\mathbf{J}' = \mathbf{AJ}$ (thus $\mathbf{J}' - \mathbf{AJ} = \mathbf{0}$) by substituting $\mathbf{J} = \mathbf{x}e^{\lambda t}$. This gives

$$\mathbf{J}' = \lambda \mathbf{x} e^{\lambda t} = \mathbf{A}\mathbf{x} e^{\lambda t}, \qquad \text{hence} \qquad \mathbf{A}\mathbf{x} = \lambda \mathbf{x}.$$

Hence, to obtain a nontrivial solution, we again need the eigenvalues and eigenvectors. For the present matrix **A** they are derived in Example 1 in Sec. 4.0:

$$\lambda_1 = -2, \qquad \mathbf{x}^{(1)} = \begin{bmatrix} 2 \\ 1 \end{bmatrix}; \qquad \lambda_2 = -0.8, \qquad \mathbf{x}^{(2)} = \begin{bmatrix} 1 \\ 0.8 \end{bmatrix}.$$

Page 134

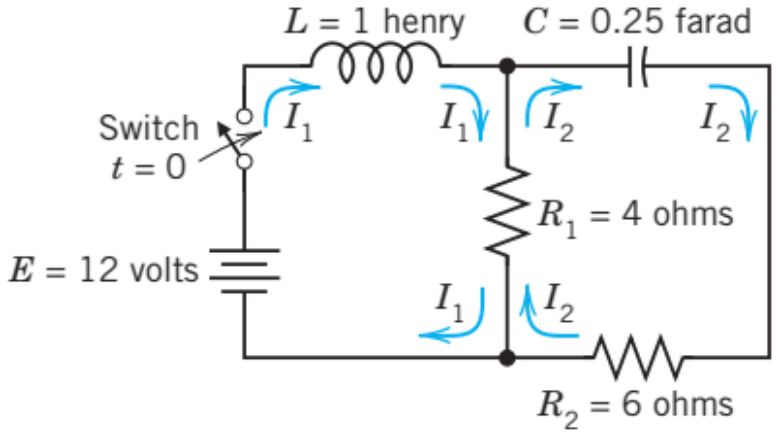

Hence a "general solution" of the homogeneous system is

$$\mathbf{J}_h = c_1\mathbf{x}^{(1)}e^{-2t} + c_2\mathbf{x}^{(2)}e^{-0.8t}.$$

For a particular solution of the nonhomogeneous system (5), since $\mathbf{g}$ is constant, we try a constant column vector $\mathbf{J}_p = \mathbf{a}$ with components a_1, a_2. Then $\mathbf{J}_p' = \mathbf{0}$, and substitution into (5) gives $\mathbf{Aa} + \mathbf{g} = \mathbf{0}$; in components,

$$-4.0a_1 + 4.0a_2 + 12.0 = 0$$

$$-1.6a_1 + 1.2a_2 + \ \ 4.8 = 0.$$

The solution is $a_1 = 3$, $a_2 = 0$; thus $\mathbf{a} = \begin{bmatrix} 3 \\ 0 \end{bmatrix}$. Hence

(6) $$\mathbf{J} = \mathbf{J}_h + \mathbf{J}_p = c_1\mathbf{x}^{(1)}e^{-2t} + c_2\mathbf{x}^{(2)}e^{-0.8t} + \mathbf{a};$$

in components,

$$I_1 = 2c_1e^{-2t} + \quad c_2e^{-0.8t} + 3$$

$$I_2 = \ \ c_1e^{-2t} + 0.8c_2e^{-0.8t}.$$

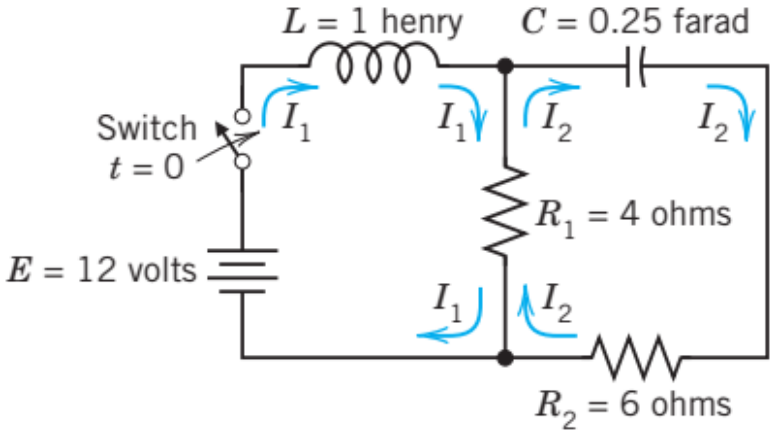

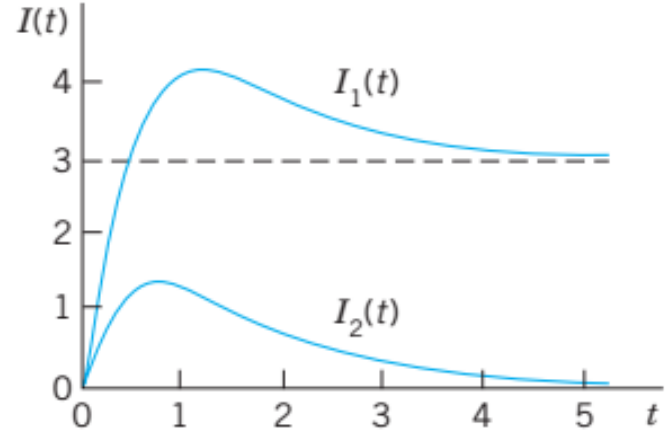

The initial conditions give

$$I_1(0) = 2c_1 + \quad c_2 + 3 = 0$$

$$I_2(0) = \quad c_1 + 0.8c_2 \qquad = 0.$$

Hence $c_1 = -4$ and $c_2 = 5$. As the solution of our problem we thus obtain

$$\mathbf{J} = -4\mathbf{x}^{(1)}e^{-2t} + 5\mathbf{x}^{(2)}e^{-0.8t} + \mathbf{a}. \tag{7}$$

In components (Fig. 80b),

$$I_1 = -8e^{-2t} + 5e^{-0.8t} + 3$$

$$I_2 = -4e^{-2t} + 4e^{-0.8t}.$$

Laplace Transforms

The main purpose of Laplace transforms is the solution of differential equations and systems of such equations, as well as corresponding initial value problems

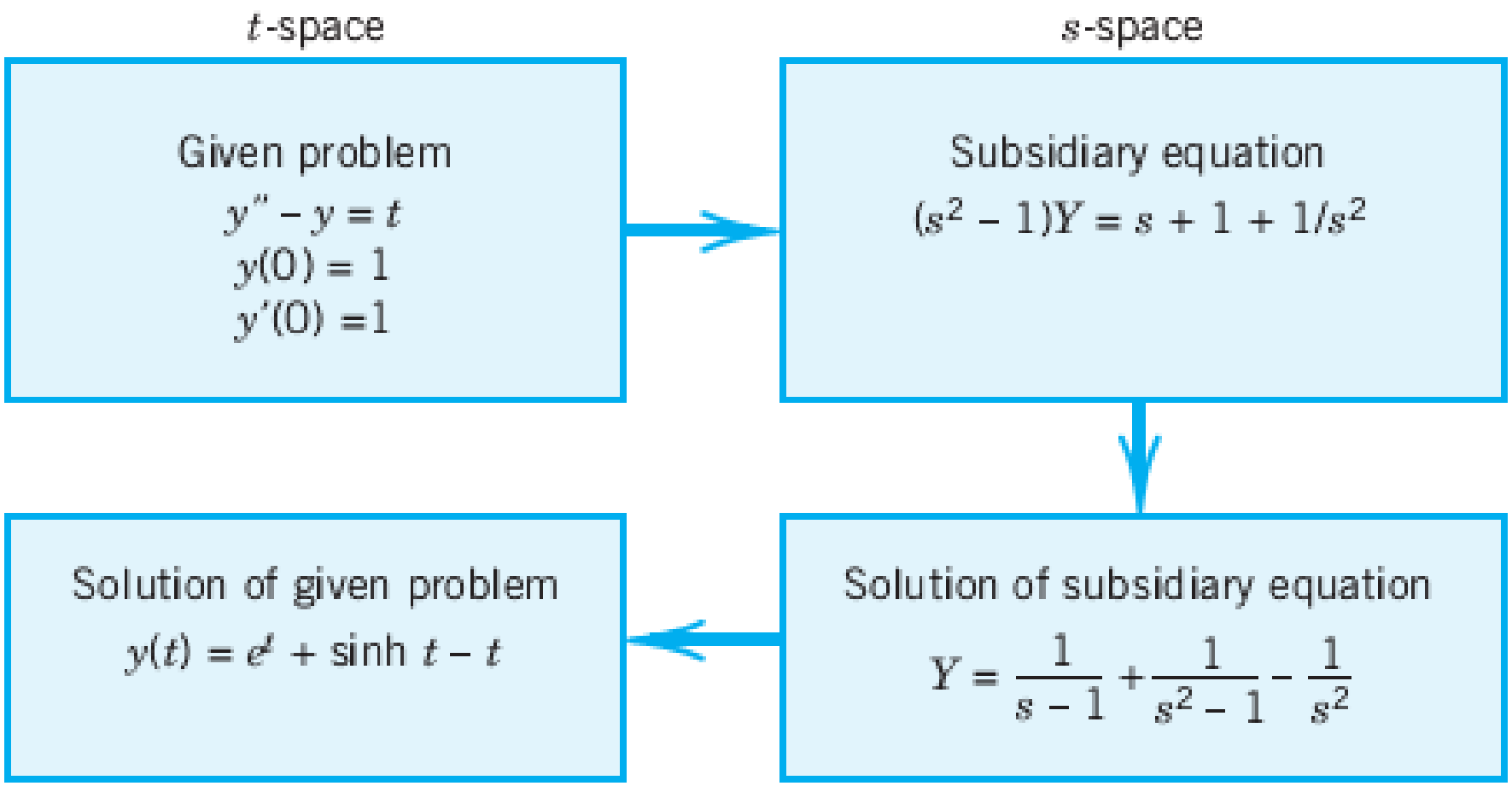

Fig. 116. Steps of the Laplace transform method

Laplace Transform. Linearity. First Shifting Theorem (s-Shifting)

If $f(t)$ is a function defined for all $t \geqq 0$, its **Laplace transform**[1] is the integral of $f(t)$ times e^{-st} from $t = 0$ to ∞. It is a function of s, say, $F(s)$, and is denoted by $\mathcal{L}(f)$; thus

$$F(s) = \mathcal{L}(f) = \int_0^\infty e^{-st} f(t)\, dt. \tag{1}$$

Furthermore, the given function $f(t)$ in (1) is called the **inverse transform** of $F(s)$ and is denoted by $\mathcal{L}^{-1}(F)$; that is, we shall write

$$f(t) = \mathcal{L}^{-1}(F). \tag{1*}$$

Note that (1) and (1*) together imply $\mathcal{L}^{-1}(\mathcal{L}(f)) = f$ and $\mathcal{L}(\mathcal{L}^{-1}(F)) = F$.

Laplace Transform. Linearity. First Shifting Theorem (s-Shifting)

EXAMPLE 1 **Laplace Transform**

Let $f(t) = 1$ when $t \geqq 0$. Find $F(s)$.

Solution. From (1) we obtain by integration

$$\mathcal{L}(f) = \mathcal{L}(1) = \int_0^\infty e^{-st}\,dt = -\frac{1}{s}e^{-st}\Big|_0^\infty = \frac{1}{s} \qquad (s > 0).$$

EXAMPLE 2 **Laplace Transform $\mathcal{L}(e^{at})$ of the Exponential Function e^{at}**

Let $f(t) = e^{at}$ when $t \geqq 0$, where a is a constant. Find $\mathcal{L}(f)$.

Solution. Again by (1),

$$\mathcal{L}(e^{at}) = \int_0^\infty e^{-st}e^{at}\,dt = \frac{1}{a-s}e^{-(s-a)t}\Big|_0^\infty;$$

hence, when $s - a > 0$,

$$\mathcal{L}(e^{at}) = \frac{1}{s-a}.$$

Page: 205

Laplace Transform. Linearity. First Shifting Theorem (s-Shifting)

Linearity of the Laplace Transform

The Laplace transform is a linear operation; that is, for any functions $f(t)$ and $g(t)$ whose transforms exist and any constants a and b the transform of $af(t) + bg(t)$ exists, and

$$\mathcal{L}\{af(t) + bg(t)\} = a\mathcal{L}\{f(t)\} + b\mathcal{L}\{g(t)\}.$$

EXAMPLE 3 Application of Theorem 1: Hyperbolic Functions

Find the transforms of $\cosh at$ and $\sinh at$.

Solution. Since $\cosh at = \frac{1}{2}(e^{at} + e^{-at})$ and $\sinh at = \frac{1}{2}(e^{at} - e^{-at})$, we obtain from Example 2 and Theorem 1

$$\mathcal{L}(\cosh at) = \frac{1}{2}(\mathcal{L}(e^{at}) + \mathcal{L}(e^{-at})) = \frac{1}{2}\left(\frac{1}{s-a} + \frac{1}{s+a}\right) = \frac{s}{s^2 - a^2}$$

$$\mathcal{L}(\sinh at) = \frac{1}{2}(\mathcal{L}(e^{at}) - \mathcal{L}(e^{-at})) = \frac{1}{2}\left(\frac{1}{s-a} - \frac{1}{s+a}\right) = \frac{a}{s^2 - a^2}.$$

EXAMPLE 4 **Cosine and Sine**

Derive the formulas

$$\mathcal{L}(\cos \omega t) = \frac{s}{s^2 + \omega^2}, \qquad \mathcal{L}(\sin \omega t) = \frac{\omega}{s^2 + \omega^2}.$$

Solution. We write $L_c = \mathcal{L}(\cos \omega t)$ and $L_s = \mathcal{L}(\sin \omega t)$. Integrating by parts and noting that the integral-free parts give no contribution from the upper limit ∞, we obtain

$$L_c = \int_0^\infty e^{-st} \cos \omega t \, dt = \frac{e^{-st}}{-s} \cos \omega t \Big|_0^\infty - \frac{\omega}{s} \int_0^\infty e^{-st} \sin \omega t \, dt = \frac{1}{s} - \frac{\omega}{s} L_s,$$

$$L_s = \int_0^\infty e^{-st} \sin \omega t \, dt = \frac{e^{-st}}{-s} \sin \omega t \Big|_0^\infty + \frac{\omega}{s} \int_0^\infty e^{-st} \cos \omega t \, dt = \frac{\omega}{s} L_c.$$

$$L_c = \frac{1}{s} - \frac{\omega}{s}\left(\frac{\omega}{s} L_c\right), \qquad L_c\left(1 + \frac{\omega^2}{s^2}\right) = \frac{1}{s}, \qquad L_c = \frac{s}{s^2 + \omega^2},$$

$$L_s = \frac{\omega}{s}\left(\frac{1}{s} - \frac{\omega}{s} L_s\right), \qquad L_s\left(1 + \frac{\omega^2}{s^2}\right) = \frac{\omega}{s^2}, \qquad L_s = \frac{\omega}{s^2 + \omega^2}.$$

Page: 207

Table 6.1 Some Functions $f(t)$ and Their Laplace Transforms $\mathcal{L}(f)$

	$f(t)$	$\mathcal{L}(f)$		$f(t)$	$\mathcal{L}(f)$
1	1	$1/s$	7	$\cos \omega t$	$\dfrac{s}{s^2 + \omega^2}$
2	t	$1/s^2$	8	$\sin \omega t$	$\dfrac{\omega}{s^2 + \omega^2}$
3	t^2	$2!/s^3$	9	$\cosh at$	$\dfrac{s}{s^2 - a^2}$
4	t^n $(n = 0, 1, \cdots)$	$\dfrac{n!}{s^{n+1}}$	10	$\sinh at$	$\dfrac{a}{s^2 - a^2}$
5	t^a (a positive)	$\dfrac{\Gamma(a+1)}{s^{a+1}}$	11	$e^{at} \cos \omega t$	$\dfrac{s - a}{(s - a)^2 + \omega^2}$
6	e^{at}	$\dfrac{1}{s - a}$	12	$e^{at} \sin \omega t$	$\dfrac{\omega}{(s - a)^2 + \omega^2}$

s-Shifting: Replacing *s* by s-a in the Transform

First Shifting Theorem, *s*-Shifting

If $f(t)$ has the transform $F(s)$ (where $s > k$ for some k), then $e^{at}f(t)$ has the transform $F(s-a)$ (where $s - a > k$). In formulas,

$$\mathcal{L}\{e^{at}f(t)\} = F(s-a)$$

or, if we take the inverse on both sides,

$$e^{at}f(t) = \mathcal{L}^{-1}\{F(s-a)\}.$$

$$\mathcal{L}\{e^{at}\cos\omega t\} = \frac{s-a}{(s-a)^2+\omega^2}, \qquad \mathcal{L}\{e^{at}\sin\omega t\} = \frac{\omega}{(s-a)^2+\omega^2}.$$

Example

find the inverse of the transform

$$\mathcal{L}(f) = \frac{3s - 137}{s^2 + 2s + 401}.$$

Applying the inverse transform, using its linearity (Prob. 24), and completing the square, we obtain

$$f = \mathcal{L}^{-1}\left\{\frac{3(s+1) - 140}{(s+1)^2 + 400}\right\} = 3\mathcal{L}^{-1}\left\{\frac{s+1}{(s+1)^2 + 20^2}\right\} - 7\mathcal{L}^{-1}\left\{\frac{20}{(s+1)^2 + 20^2}\right\}.$$

$$\longrightarrow \quad f(t) = e^{-t}(3\cos 20t - 7\sin 20t).$$

PROBLEM SET 6.1

1–16 LAPLACE TRANSFORMS

Find the transform. Show the details of your work. Assume that a, b, ω, θ are constants.

1. $3t + 12$

2. $(a - bt)^2$

3. $\cos \pi t$

4. $\cos^2 \omega t$

5. $e^{2t} \sinh t$

6. $e^{-t} \sinh 4t$

7. $\sin (\omega t + \theta)$

8. $1.5 \sin (3t - \pi/2)$

25–32 INVERSE LAPLACE TRANSFORMS

Given $F(s) = \mathcal{L}(f)$, find $f(t)$. a, b, L, n are constants. Show the details of your work.

25. $\dfrac{0.2s + 1.8}{s^2 + 3.24}$

26. $\dfrac{5s + 1}{s^2 - 25}$

27. $\dfrac{s}{L^2 s^2 + n^2 \pi^2}$

28. $\dfrac{1}{(s + \sqrt{2})(s - \sqrt{3})}$

29. $\dfrac{12}{s^4} - \dfrac{228}{s^6}$

30. $\dfrac{4s + 32}{s^2 - 16}$

31. $\dfrac{s + 10}{s^2 - s - 2}$

32. $\dfrac{1}{(s + a)(s + b)}$

33–45 APPLICATION OF s-SHIFTING

In Probs. 33–36 find the transform. In Probs. 37–45 find the inverse transform. Show the details of your work.

33. $t^2 e^{-3t}$

34. $ke^{-at} \cos \omega t$

35. $0.5e^{-4.5t} \sin 2\pi t$

36. $\sinh t \cos t$

37. $\dfrac{\pi}{(s + \pi)^2}$

38. $\dfrac{6}{(s + 1)^3}$

39. $\dfrac{21}{(s + \sqrt{2})^4}$

40. $\dfrac{4}{s^2 - 2s - 3}$

41. $\dfrac{\pi}{s^2 + 10\pi s + 24\pi^2}$

42. $\dfrac{a_0}{s + 1} + \dfrac{a_1}{(s + 1)^2} + \dfrac{a_2}{(s + 1)^3}$

43. $\dfrac{2s - 1}{s^2 - 6s + 18}$

44. $\dfrac{a(s + k) + b\pi}{(s + k)^2 + \pi^2}$

45. $\dfrac{k_0(s + a) + k_1}{(s + a)^2}$

Laplace Transform of Derivatives

The transforms of the first and second derivatives of $f(t)$ satisfy

(1) $$\mathcal{L}(f') = s\mathcal{L}(f) - f(0)$$

(2) $$\mathcal{L}(f'') = s^2\mathcal{L}(f) - sf(0) - f'(0).$$

Formula (1) *holds if* $f(t)$ *is continuous for all* $t \geqq 0$ *and satisfies the growth restriction* (2) *in Sec.* 6.1 *and* $f'(t)$ *is piecewise continuous on every finite interval on the semi-axis* $t \geqq 0$. *Similarly,* (2) *holds if* f *and* f' *are continuous for all* $t \geqq 0$ *and satisfy the growth restriction and* f'' *is piecewise continuous on every finite interval on the semi-axis* $t \geqq 0$.

Laplace Transform of the Derivative $f^{(n)}$ of Any Order

Let $f, f', \cdots, f^{(n-1)}$ be continuous for all $t \geqq 0$ and satisfy the growth restriction (2) in Sec. 6.1. Furthermore, let $f^{(n)}$ be piecewise continuous on every finite interval on the semi-axis $t \geqq 0$. Then the transform of $f^{(n)}$ satisfies

$$\mathcal{L}(f^{(n)}) = s^n \mathcal{L}(f) - s^{n-1} f(0) - s^{n-2} f'(0) - \cdots - f^{(n-1)}(0). \tag{3}$$

Laplace Transform of Integral

Let $F(s)$ denote the transform of a function $f(t)$ which is piecewise continuous for $t \geqq 0$ and satisfies a growth restriction (2), Sec. 6.1. Then, for $s > 0$, $s > k$, and $t > 0$,

$$\mathcal{L}\left\{\int_0^t f(\tau)\,d\tau\right\} = \frac{1}{s}F(s), \qquad \text{thus} \qquad \int_0^t f(\tau)\,d\tau = \mathcal{L}^{-1}\left\{\frac{1}{s}F(s)\right\}. \tag{4}$$

Example

Using Theorem 3, find the inverse of $\dfrac{1}{s(s^2+\omega^2)}$ and $\dfrac{1}{s^2(s^2+\omega^2)}$.

Solution. From Table 6.1 in Sec. 6.1 and the integration in (4) (second formula with the sides interchanged) we obtain

$$\mathcal{L}^{-1}\left\{\frac{1}{s^2+\omega^2}\right\} = \frac{\sin \omega t}{\omega}, \qquad \mathcal{L}^{-1}\left\{\frac{1}{s(s^2+\omega^2)}\right\} = \int_0^t \frac{\sin \omega t}{\omega}\, d\tau = \frac{1}{\omega^2}(1-\cos \omega t).$$

This is formula 19 in Sec. 6.9. Integrating this result again and using (4) as before, we obtain formula 20 in Sec. 6.9:

$$\mathcal{L}^{-1}\left\{\frac{1}{s^2(s^2+\omega^2)}\right\} = \frac{1}{\omega^2}\int_0^t (1-\cos \omega\tau)\, d\tau = \left[\frac{\tau}{\omega^2} - \frac{\sin \omega\tau}{\omega^3}\right]_0^t = \frac{t}{\omega^2} - \frac{\sin \omega\tau}{\omega^3}.$$

Page: 213

Differential Equations, Initial Value Problems

$$y'' + ay' + by = r(t), \qquad y(0) = K_0, \qquad y'(0) = K_1$$

Step 1. Setting up the subsidiary equation.

$$[s^2Y - sy(0) - y'(0)] + a[sY - y(0)] + bY = R(s) \qquad Y = \mathcal{L}(y)$$

$$(s^2 + as + b)Y = (s + a)y(0) + y'(0) + R(s).$$

Step 2. Solution of the subsidiary equation by algebra.

$$Q(s) = \frac{1}{s^2 + as + b}$$

$$Y(s) = [(s + a)y(0) + y'(0)]Q(s) + R(s)Q(s).$$

Step 3. Inversion of Y to obtain $y = \mathcal{L}^{-1}(Y)$.

Page 214

Solve

$$y'' - y = t, \qquad y(0) = 1, \qquad y'(0) = 1.$$

Solution. ***Step 1.*** From (2) and Table 6.1 we get the subsidiary equation [with $Y = \mathcal{L}(y)$]

$$s^2Y - sy(0) - y'(0) - Y = 1/s^2, \qquad \text{thus} \qquad (s^2 - 1)Y = s + 1 + 1/s^2.$$

Step 2. The transfer function is $Q = 1/(s^2 - 1)$, and (7) becomes

$$Y = (s + 1)Q + \frac{1}{s^2}Q = \frac{s + 1}{s^2 - 1} + \frac{1}{s^2(s^2 - 1)}.$$

Simplification of the first fraction and an expansion of the last fraction gives

$$Y = \frac{1}{s - 1} + \left(\frac{1}{s^2 - 1} - \frac{1}{s^2}\right).$$

Step 3. From this expression for Y and Table 6.1 we obtain the solution

$$y(t) = \mathcal{L}^{-1}(Y) = \mathcal{L}^{-1}\left\{\frac{1}{s - 1}\right\} + \mathcal{L}^{-1}\left\{\frac{1}{s^2 - 1}\right\} - \mathcal{L}^{-1}\left\{\frac{1}{s^2}\right\} = e^t + \sinh t - t.$$

Example: Solve the initial value problem

$$\boxed{y'' + y' + 9y = 0. \qquad y(0) = 0.16, \qquad y'(0) = 0.}$$

Solution. From (1) and (2) we see that the subsidiary equation is

$$s^2Y - 0.16s + sY - 0.16 + 9Y = 0, \qquad \text{thus} \qquad (s^2 + s + 9)Y = 0.16(s + 1).$$

The solution is

$$Y = \frac{0.16(s + 1)}{s^2 + s + 9} = \frac{0.16(s + \frac{1}{2}) + 0.08}{(s + \frac{1}{2})^2 + \frac{35}{4}}.$$

Hence by the first shifting theorem and the formulas for cos and sin in Table 6.1 we obtain

$$y(t) = \mathcal{L}^{-1}(Y) = e^{-t/2}\left(0.16 \cos \sqrt{\frac{35}{4}}\, t + \frac{0.08}{\frac{1}{2}\sqrt{35}} \sin \sqrt{\frac{35}{4}}\, t\right)$$

$$= e^{-0.5t}(0.16 \cos 2.96t + 0.027 \sin 2.96t).$$

Page: 215

Shifted Data Problems: Solve

$$y'' + y = 2t, \qquad y(\tfrac{1}{4}\pi) = \tfrac{1}{2}\pi, \qquad y'(\tfrac{1}{4}\pi) = 2 - \sqrt{2}.$$

Solution. We have $t_0 = \frac{1}{4}\pi$ and we set $t = \tilde{t} + \frac{1}{4}\pi$. Then the problem is

$$\tilde{y}'' + \tilde{y} = 2(\tilde{t} + \tfrac{1}{4}\pi), \qquad \tilde{y}(0) = \tfrac{1}{2}\pi, \qquad \tilde{y}'(0) = 2 - \sqrt{2}$$

where $\tilde{y}(\tilde{t}) = y(t)$. Using (2) and Table 6.1 and denoting the transform of $\tilde{y}$ by $\tilde{Y}$, we see that the subsidiary equation of the "shifted" initial value problem is

$$s^2\tilde{Y} - s \cdot \tfrac{1}{2}\pi - (2 - \sqrt{2}) + \tilde{Y} = \frac{2}{s^2} + \frac{\frac{1}{2}\pi}{s}, \qquad \text{thus} \qquad (s^2 + 1)\tilde{Y} = \frac{2}{s^2} + \frac{\frac{1}{2}\pi}{s} + \frac{1}{2}\pi s + 2 - \sqrt{2}.$$

Solving this algebraically for $\tilde{Y}$, we obtain

$$\tilde{Y} = \frac{2}{(s^2 + 1)s^2} + \frac{\frac{1}{2}\pi}{(s^2 + 1)s} + \frac{\frac{1}{2}\pi s}{s^2 + 1} + \frac{2 - \sqrt{2}}{s^2 + 1}.$$

The inverse of the first two terms can be seen from Example 3 (with $\omega = 1$), and the last two terms give cos and sin,

$$\begin{aligned}\tilde{y} = \mathcal{L}^{-1}(\tilde{Y}) &= 2(\tilde{t} - \sin\tilde{t}) + \tfrac{1}{2}\pi(1 - \cos\tilde{t}) + \tfrac{1}{2}\pi\cos\tilde{t} + (2 - \sqrt{2})\sin\tilde{t} \\ &= 2\tilde{t} + \tfrac{1}{2}\pi - \sqrt{2}\sin\tilde{t}.\end{aligned}$$

Now $\tilde{t} = t - \frac{1}{4}\pi$, $\sin\tilde{t} = \dfrac{1}{\sqrt{2}}(\sin t - \cos t)$, so that the answer (the solution) is

$$y = 2t - \sin t + \cos t.$$

PROBLEM SET 6.2

1. $y' + 5.2y = 19.4 \sin 2t, \quad y(0) = 0$
2. $y' + 2y = 0, \quad y(0) = 1.5$
3. $y'' - y' - 6y = 0, \quad y(0) = 11, \quad y'(0) = 28$
4. $y'' + 9y = 10e^{-t}, \quad y(0) = 0, \quad y'(0) = 0$
5. $y'' - \frac{1}{4}y = 0, \quad y(0) = 12, \quad y'(0) = 0$
6. $y'' - 6y' + 5y = 29 \cos 2t, \quad y(0) = 3.2,$
   $y'(0) = 6.2$
7. $y'' + 7y' + 12y = 21e^{3t}, \quad y(0) = 3.5,$
   $y'(0) = -10$
8. $y'' - 4y' + 4y = 0, \quad y(0) = 8.1, \quad y'(0) = 3.9$
9. $y'' - 4y' + 3y = 6t - 8, \quad y(0) = 0, \quad y'(0) = 0$
10. $y'' + 0.04y = 0.02t^2, \quad y(0) = -25, \quad y'(0) = 0$
11. $y'' + 3y' + 2.25y = 9t^3 + 64, \quad y(0) = 1,$
    $y'(0) = 31.5$

12–15 SHIFTED DATA PROBLEMS

Solve the shifted data IVPs by the Laplace transform. Show the details.

12. $y'' - 2y' - 3y = 0, \quad y(4) = -3,$
    $y'(4) = -17$
13. $y' - 6y = 0, \quad y(-1) = 4$
14. $y'' + 2y' + 5y = 50t - 100, \quad y(2) = -4,$
    $y'(2) = 14$
15. $y'' + 3y' - 4y = 6e^{2t-3}, \quad y(1.5) = 4,$
    $y'(1.5) = 5$

Unit Step Function (Heaviside Function).

The **unit step function** or **Heaviside function** $u(t-a)$ is 0 for $t < a$, has a jump of size 1 at $t = a$ (where we can leave it undefined), and is 1 for $t > a$, in a formula:

$$u(t-a) = \begin{cases} 0 & \text{if } t < a \\ 1 & \text{if } t > a \end{cases} \qquad (a \geqq 0). \tag{1}$$

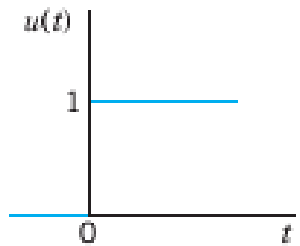

Fig. 118. Unit step function $u(t)$

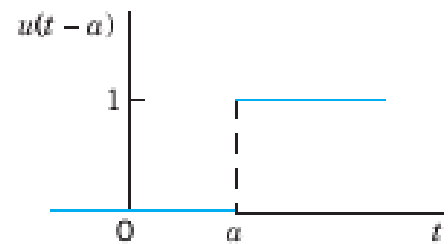

Fig. 119. Unit step function $u(t-a)$

$$\mathcal{L}\{u(t-a)\} = \frac{e^{-as}}{s} \qquad (s > 0). \tag{2}$$

Unit Step Function (Heaviside Function).

Let $f(t) = 0$ for all negative t. Then $f(t-a)u(t-a)$ with $a > 0$ is $f(t)$ ***shifted*** *(translated) to the right by the amount a.*

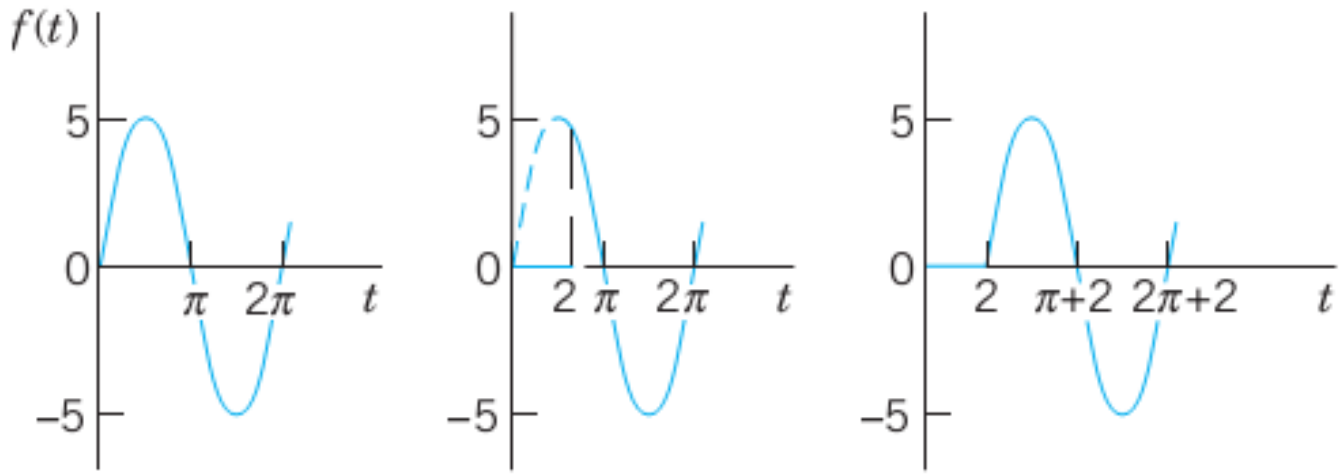

(A) $f(t) = 5 \sin t$ (B) $f(t)u(t-2)$ (C) $f(t-2)u(t-2)$

Fig. 120. Effects of the unit step function: (A) Given function. (B) Switching off and on. (C) Shift.

Unit Step Function (Heaviside Function).

Second Shifting Theorem; Time Shifting

If $f(t)$ has the transform $F(s)$, then the "**shifted function**"

$$\tilde{f}(t) = f(t-a)u(t-a) = \begin{cases} 0 & \text{if } t < a \\ f(t-a) & \text{if } t > a \end{cases} \tag{3}$$

has the transform $e^{-as}F(s)$. *That is, if* $\mathcal{L}\{f(t)\} = F(s)$, *then*

$$\mathcal{L}\{f(t-a)u(t-a)\} = e^{-as}F(s). \tag{4}$$

Or, if we take the inverse on both sides, we can write

$$f(t-a)u(t-a) = \mathcal{L}^{-1}\{e^{-as}F(s)\}. \tag{4*}$$

using unit step functions and find its transform.

$$f(t) = \begin{cases} 2 & \text{if } 0 < t < 1 \\ \frac{1}{2}t^2 & \text{if } 1 < t < \frac{1}{2}\pi \\ \cos t & \text{if } \quad t > \frac{1}{2}\pi. \end{cases}$$

Solution. ***Step 1.*** In terms of unit step functions,

$$f(t) = 2(1 - u(t-1)) + \tfrac{1}{2}t^2(u(t-1) - u(t - \tfrac{1}{2}\pi)) + (\cos t)u(t - \tfrac{1}{2}\pi).$$

Step 2. To apply Theorem 1, we must write each term in $f(t)$ in the form $f(t-a)u(t-a)$.

$$\mathcal{L}\left\{\frac{1}{2}t^2u(t-1)\right\} = \mathcal{L}\left(\frac{1}{2}(t-1)^2 + (t-1) + \frac{1}{2}\right)u(t-1)\Big\} = \left(\frac{1}{s^3} + \frac{1}{s^2} + \frac{1}{2s}\right)e^{-s}$$

$$\mathcal{L}\left\{\frac{1}{2}t^2u\left(t - \frac{1}{2}\pi\right)\right\} = \mathcal{L}\left\{\frac{1}{2}\left(t - \frac{1}{2}\pi\right)^2 + \frac{\pi}{2}\left(t - \frac{1}{2}\pi\right) + \frac{\pi^2}{8}\right)u\left(t - \frac{1}{2}\pi\right)\Big\}$$

$$= \left(\frac{1}{s^3} + \frac{\pi}{2s^2} + \frac{\pi^2}{8s}\right)e^{-\pi s/2}$$

$$\mathcal{L}\left\{(\cos t)u\left(t - \frac{1}{2}\pi\right)\right\} = \mathcal{L}\left\{-\left(\sin\left(t - \frac{1}{2}\pi\right)\right)u\left(t - \frac{1}{2}\pi\right)\right\} = -\frac{1}{s^2+1}e^{-\pi s/2}.$$

$$\mathcal{L}(f) = \frac{2}{s} - \frac{2}{s}e^{-s} + \left(\frac{1}{s^3} + \frac{1}{s^2} + \frac{1}{2s}\right)e^{-s} - \left(\frac{1}{s^3} + \frac{\pi}{2s^2} + \frac{\pi^2}{8s}\right)e^{-\pi s/2} - \frac{1}{s^2+1}e^{-\pi s/2}.$$

Page: 220

(4**) $$\mathcal{L}\{f(t)u(t-a)\} = e^{-as}\mathcal{L}\{f(t+a)\}.$$

$$\mathcal{L}\left\{\frac{1}{2}t^2u(t-1)\right\} = e^{-s}\mathcal{L}\left\{\frac{1}{2}(t+1)^2\right\} = e^{-s}\mathcal{L}\left\{\frac{1}{2}t^2 + t + \frac{1}{2}\right\} = e^{-s}\left(\frac{1}{s^3} + \frac{1}{s^2} + \frac{1}{2s}\right)$$

$$\mathcal{L}\left\{\cos t\, u\left(t - \frac{1}{2}\pi\right)\right\} = e^{-\pi s/2}\mathcal{L}\left\{\cos\left(t + \frac{1}{2}\pi\right)\right\} = e^{-\pi s/2}\mathcal{L}\{-\sin t\} = -e^{-\pi s/2}\frac{1}{s^2+1}.$$

Application of Both Shifting Theorems. Inverse Transform

Find the inverse transform $f(t)$ of

$$F(s) = \frac{e^{-s}}{s^2+\pi^2} + \frac{e^{-2s}}{s^2+\pi^2} + \frac{e^{-3s}}{(s+2)^2}.$$

Solution. Without the exponential functions in the numerator the three terms of $F(s)$ would have the inverses $(\sin \pi t)/\pi$, $(\sin \pi t)/\pi$, and te^{-2t} because $1/s^2$ has the inverse t, so that $1/(s+2)^2$ has the inverse te^{-2t} by the first shifting theorem in Sec. 6.1. Hence by the second shifting theorem (t-shifting),

$$f(t) = \frac{1}{\pi}\sin(\pi(t-1))\,u(t-1) + \frac{1}{\pi}\sin(\pi(t-2))\,u(t-2) + (t-3)e^{-2(t-3)}\,u(t-3).$$

Response of an *RC*-Circuit to a Single Rectangular Wave

Find the current $i(t)$ in the RC-circuit in Fig. 124 if a single rectangular wave with voltage V_0 is applied. The circuit is assumed to be quiescent before the wave is applied.

Solution. The input is $V_0[u(t-a) - u(t-b)]$. Hence the circuit is modeled by the integro-differential equation (see Sec. 2.9 and Fig. 124)

$$Ri(t) + \frac{q(t)}{C} = Ri(t) + \frac{1}{C}\int_0^t i(\tau)\,d\tau = v(t) = V_0[u(t-a) - u(t-b)].$$

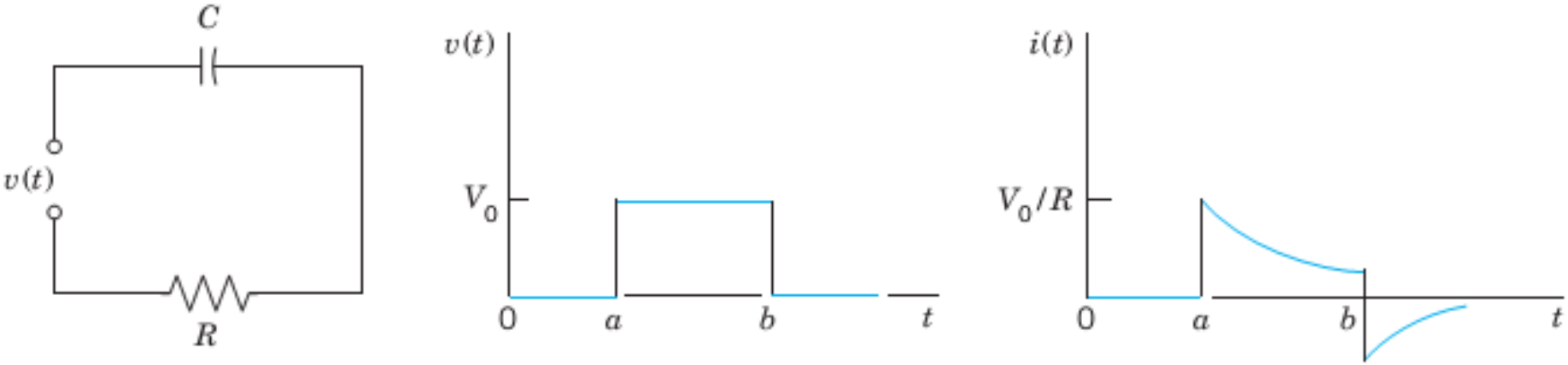

Fig. 124. *RC*-circuit, electromotive force $v(t)$, and current in Example 3

Pages: 221

Using Theorem 3 in Sec. 6.2 and formula (1) in this section, we obtain the subsidiary equation

$$RI(s) + \frac{I(s)}{sC} = \frac{V_0}{s}[e^{-as} - e^{-bs}].$$

Solving this equation algebraically for $I(s)$, we get

$$I(s) = F(s)(e^{-as} - e^{-bs}) \qquad \text{where} \qquad F(s) = \frac{V_0 IR}{s + 1/(RC)} \qquad \text{and} \qquad \mathcal{L}^{-1}(F) = \frac{V_0}{R}e^{-t/(RC)},$$

the last expression being obtained from Table 6.1 in Sec. 6.1. Hence Theorem 1 yields the solution (Fig. 124)

$$i(t) = \mathcal{L}^{-1}(I) = \mathcal{L}^{-1}\{e^{-as}F(s)\} - \mathcal{L}^{-1}\{e^{-bs}F(s)\} = \frac{V_0}{R}[e^{-(t-a)/(RC)}u(t-a) - e^{-(t-b)/(RC)}u(t-b)];$$

that is, $i(t) = 0$ if $t < a$, and

$$i(t) = \begin{cases} K_1 e^{-t/(RC)} & \text{if } a < t < b \\ (K_1 - K_2)e^{-t/(RC)} & \text{if } a > b \end{cases}$$

where $K_1 = V_0 e^{a/(RC)}/R$ and $K_2 = V_0 e^{b/(RC)}/R$.

Response of an *RLC*-Circuit to a Sinusoidal Input Acting Over a Time Interval

Find the response (the current) of the *RLC*-circuit in Fig. 125, where $E(t)$ is sinusoidal, acting for a short time interval only, say,

$$E(t) = 100 \sin 400t \quad \text{if } 0 < t < 2\pi \qquad \text{and} \qquad E(t) = 0 \text{ if } t > 2\pi$$

and current and charge are initially zero.

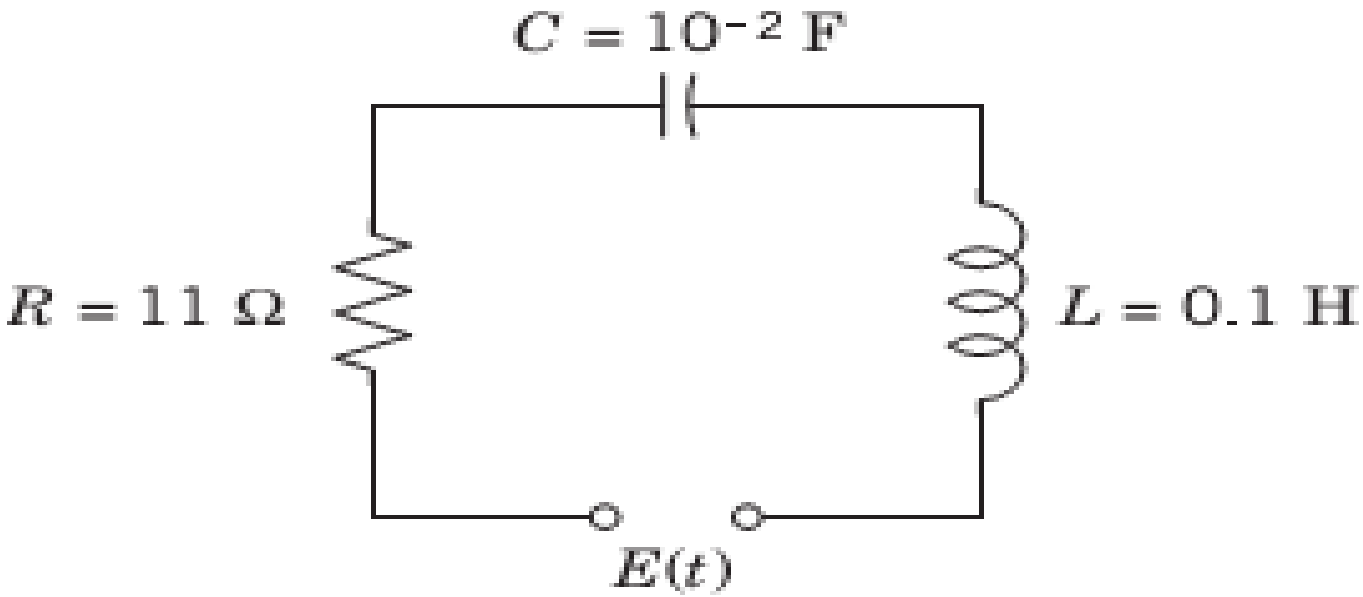

Fig. 125. *RLC*-circuit in Example 4

Pages: 221-224

Solution. The electromotive force $E(t)$ can be represented by $(100 \sin 400t)(1 - u(t - 2\pi))$. Hence the model for the current $i(t)$ in the circuit is the integro-differential equation (see Sec. 2.9)

$$0.1i' + 11i + 100\int_0^t i(\tau)\,d\tau = (100 \sin 400t)(1 - u(t - 2\pi)). \qquad i(0) = 0, \quad i'(0) = 0.$$

From Theorems 2 and 3 in Sec. 6.2 we obtain the subsidiary equation for $I(s) = \mathcal{L}(i)$

$$0.1sI + 11I + 100\frac{I}{s} = \frac{100 \cdot 400s}{s^2 + 400^2}\left(\frac{1}{s} - \frac{e^{-2\pi s}}{s}\right).$$

Solving it algebraically and noting that $s^2 + 110s + 1000 = (s + 10)(s + 100)$, we obtain

$$I(s) = \frac{1000 \cdot 400}{(s + 10)(s + 100)}\left(\frac{s}{s^2 + 400^2} - \frac{se^{-2\pi s}}{s^2 + 400^2}\right).$$

when $0 < t < 2\pi$ $\quad i_1(t) = -0.2776e^{-10t} + 2.6144e^{-100t} - 2.3368 \cos 400t + 0.6467 \sin 400t.$

for $t > 2\pi$ $\quad i_2(t) = -0.2776e^{-10(t-2\pi)} + 2.6144e^{-100(t-2\pi)} - 2.3368 \cos 400t + 0.6467 \sin 400t.$

PROBLEM SET 6.3

2–11 SECOND SHIFTING THEOREM, UNIT STEP FUNCTION

2. $t\ (0 < t < 2)$

3. $t - 2\ (t > 2)$

4. $\cos 4t\ (0 < t < \pi)$

5. $e^t\ (0 < t < \pi/2)$

6. $\sin \pi t\ (2 < t < 4)$

7. $e^{-\pi t}\ (2 < t < 4)$

8. $t^2\ (1 < t < 2)$

9. $t^2\ (t > \frac{3}{2})$

10. $\sinh t\ (0 < t < 2)$

11. $\sin t\ (\pi/2 < t < \pi)$

38–40 *RLC*-CIRCUIT

Using the Laplace transform and showing the details, find the current $i(t)$ in the circuit in Fig. 130, assuming zero initial current and charge and:

38. $R = 4\ \Omega$, $L = 1$ H, $C = 0.05$ F, $v = 34e^{-t}$ V if $0 < t < 4$ and 0 if $t > 4$

39. $R = 2\ \Omega$, $L = 1$ H, $C = 0.5$ F, $v(t) = 1$ kV if $0 < t < 2$ and 0 if $t > 2$

40. $R = 2\ \Omega$, $L = 1$ H, $C = 0.1$ F, $v = 255 \sin t$ V if $0 < t < 2\pi$ and 0 if $t > 2\pi$

18–27 IVPs, SOME WITH DISCONTINUOUS INPUT

Using the Laplace transform and showing the details, solve

18. $9y'' - 6y' + y = 0, \quad y(0) = 3,\ y'(0) = 1$

19. $y'' + 6y' + 8y = e^{-3t} - e^{-5t}, \quad y(0) = 0,\ y'(0) = 0$

20. $y'' + 10y' + 24y = 144t^2, \quad y(0) = 19/12,$ $y'(0) = -5$

21. $y'' + 9y = 8 \sin t$ if $0 < t < \pi$ and 0 if $t > \pi$; $y(0) = 0,\ y'(0) = 4$

22. $y'' + 3y' + 2y = 4t$ if $0 < t < 1$ and 8 if $t > 1$; $y(0) = 0,\ y'(0) = 0$

23. $y'' + y' - 2y = 3 \sin t - \cos t$ if $0 < t < 2\pi$ and $3 \sin 2t - \cos 2t$ if $t > 2\pi$; $\quad y(0) = 1,\ y'(0) = 0$

24. $y'' + 3y' + 2y = 1$ if $0 < t < 1$ and 0 if $t > 1$; $y(0) = 0,\ y'(0) = 0$

25. $y'' + y = t$ if $0 < t < 1$ and 0 if $t > 1$; $\quad y(0) = 0,$ $y'(0) = 0$

26. Shifted data. $y'' + 2y' + 5y = 10 \sin t$ if $0 < t < 2\pi$ and 0 if $t > 2\pi$; $\quad y(\pi) = 1,\ y'(\pi) = 2e^{-\pi} - 2$

27. Shifted data. $y'' + 4y = 8t^2$ if $0 < t < 5$ and 0 if $t > 5$; $\quad y(1) = 1 + \cos 2,\ y'(1) = 4 - 2 \sin 2$

Short Impulses. Dirac's Delta Function.

$$f_k(t-a) = \begin{cases} 1/k & \text{if } a \leqq t \leqq a+k \\ 0 & \text{otherwise} \end{cases} \tag{1}$$

(Fig. 132)

the impulse of f_k in (1) is

$$I_k = \int_0^\infty f_k(t-a)\,dt = \int_a^{a+k} \frac{1}{k}\,dt = 1. \tag{2}$$

→ Dirac delta function or the unit impulse function:

$$\boxed{\delta(t-a) = \lim_{k \to 0} f_k(t-a).}$$

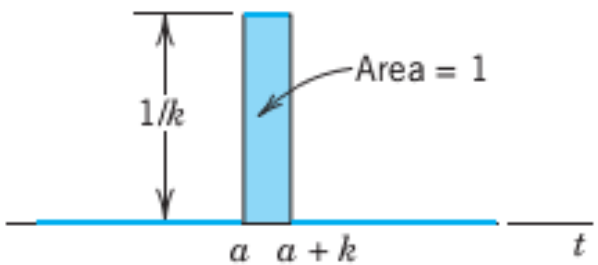

Fig. 132. The function $f_k(t-a)$ in (1)

Short Impulses. Dirac's Delta Function.

(3) $$\delta(t-a) = \begin{cases} \infty & \text{if } t = a \\ 0 & \text{otherwise} \end{cases} \quad \text{and} \quad \int_0^\infty \delta(t-a)\,dt = 1,$$

(4) $$\int_0^\infty g(t)\delta(t-a)\,dt = g(a)$$

g(t): continuous function

(5) $$\mathcal{L}\{\delta(t-a)\} = e^{-as}.$$

Proof: ?

Four-Terminal *RLC*-Network

Find the output voltage response in Fig. 135 if $R = 20\ \Omega$, $L = 1$ H, $C = 10^{-4}$ F, the input is $\delta(t)$ (a unit impulse at time $t = 0$), and current and charge are zero at time $t = 0$.

Solution. To understand what is going on, note that the network is an *RLC*-circuit to which two wires at A and B are attached for recording the voltage $v(t)$ on the capacitor. Recalling from Sec. 2.9 that current $i(t)$ and charge $q(t)$ are related by $i = q' = dq/dt$, we obtain the model

$$Li' + Ri + \frac{q}{C} = Lq'' + Rq' + \frac{q}{C} = q'' + 20q' + 10{,}000q = \delta(t).$$

From (1) and (2) in Sec. 6.2 and (5) in this section we obtain the subsidiary equation for $Q(s) = \mathcal{L}(q)$

$$(s^2 + 20s + 10{,}000)Q = 1. \qquad \text{Solution} \qquad Q = \frac{1}{(s + 10)^2 + 9900}.$$

By the first shifting theorem in Sec. 6.1 we obtain from Q damped oscillations for q and v; rounding $9900 \approx 99.50^2$, we get (Fig. 135)

$$q = \mathcal{L}^{-1}(Q) = \frac{1}{99.50} e^{-10t} \sin 99.50t \qquad \text{and} \qquad v = \frac{q}{C} = 100.5e^{-10t} \sin 99.50t.$$

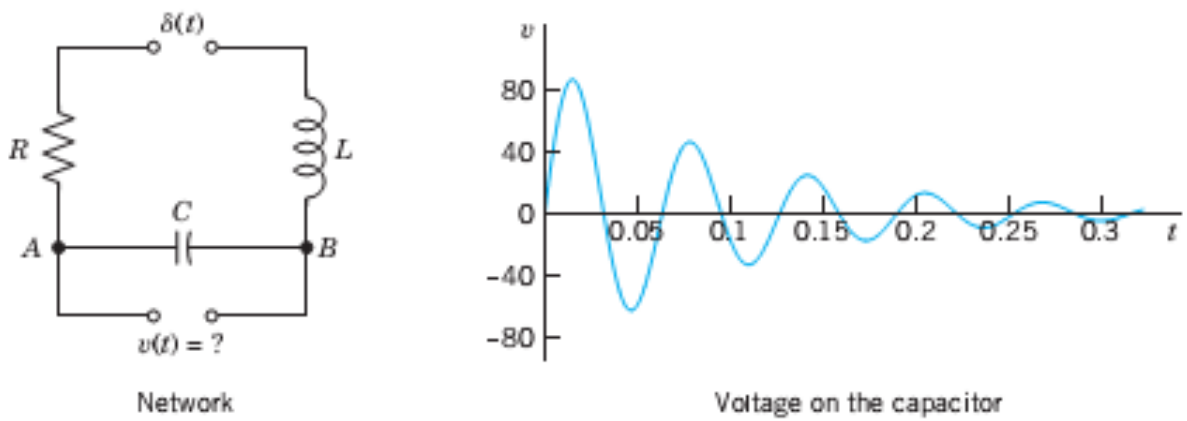

Page: 228

Fig. 135. Network and output voltage in Example 3

Convolution. Integral Equations

(1)

$$h(t) = (f * g)(t) = \int_0^t f(\tau)g(t-\tau)\,d\tau.$$

Convolution Theorem

If two functions f and g satisfy the assumption in the existence theorem in Sec. 6.1, *so that their transforms F and G exist, the product $H = FG$ is the transform of h given by* (1). (Proof after Example 2.)

$$F(s) = \int_0^\infty e^{-st} f(t)\, dt, \qquad \text{then} \qquad F'(s) = -\int_0^\infty e^{-st} t f(t)\, dt.$$

(1) $$\mathcal{L}\{tf(t)\} = -F'(s), \qquad \text{hence} \qquad \mathcal{L}^{-1}\{F'(s)\} = -tf(t)$$

(6) $$\mathcal{L}\left\{\frac{f(t)}{t}\right\} = \int_s^\infty F(\tilde{s})\, d\tilde{s} \qquad \text{hence} \qquad \mathcal{L}^{-1}\left\{\int_s^\infty F(\tilde{s})\, d\tilde{s}\right\} = \frac{f(t)}{t}.$$

Electrical Network

Find the currents $i_1(t)$ and $i_2(t)$ in the network in Fig. 145 with L and R measured in terms of the usual units (see Sec. 2.9), $v(t) = 100$ volts if $0 \leqq t \leqq 0.5$ sec and 0 thereafter, and $i(0) = 0$, $i'(0) = 0$.

Solution. The model of the network is obtained from Kirchhoff's Voltage Law as in Sec. 2.9. For the lower circuit we obtain

$$0.8i_1' + 1(i_1 - i_2) + 1.4i_1 = 100[1 - u(t - \tfrac{1}{2})]$$

$$1 \cdot i_2' + 1(i_2 - i_1) = 0.$$

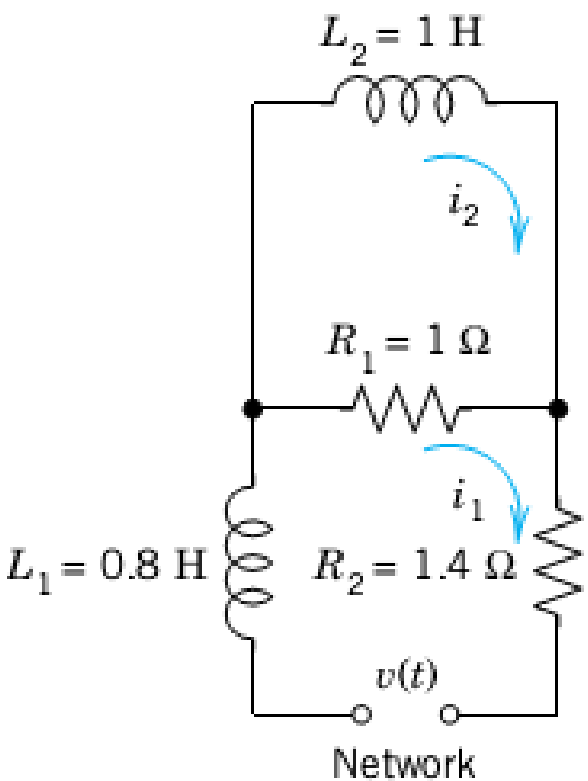

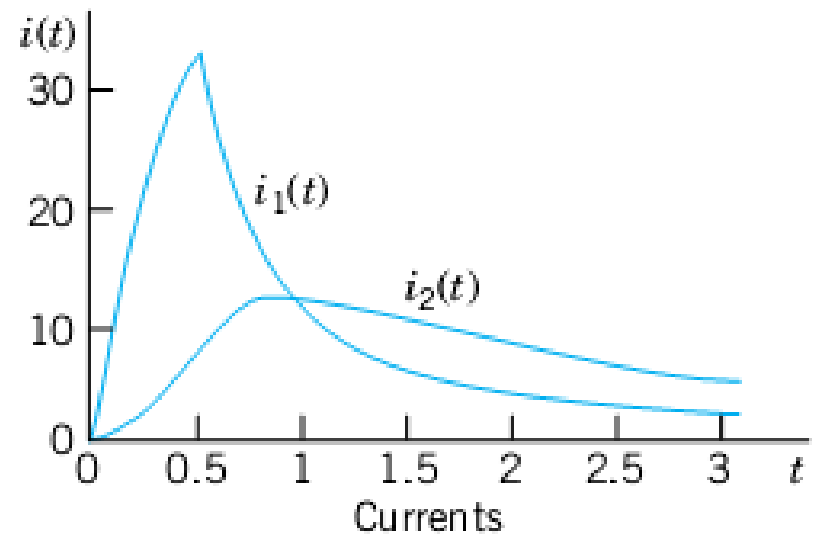

Fig. 145. Electrical network in Example 2

Pages: 243-244

$$(s+3)I_1 - 1.25I_2 = 125\left(\frac{1}{s} - \frac{e^{-s/2}}{s}\right)$$

$$-I_1 + (s+1)I_2 = 0.$$

$$I_1 = \frac{125(s+1)}{s(s+\frac{1}{2})(s+\frac{7}{2})}(1 - e^{-s/2}),$$

$$I_2 = \frac{125}{s(s+\frac{1}{2})(s+\frac{7}{2})}(1 - e^{-s/2}).$$

$$\boxed{\begin{aligned} i_1(t) &= -\frac{125}{3}e^{-t/2} - \frac{625}{21}e^{-7t/2} + \frac{500}{7} \\ i_2(t) &= -\frac{250}{3}e^{-t/2} + \frac{250}{21}e^{-7t/2} + \frac{500}{7} \end{aligned}}$$